Collection of Air and Precipitation Samples

IADN Project
Standard Operating Procedure

Prepared by

James C. Bays and Amina Salamova

O'Neill School of Public and Environmental Affairs
Indiana University
Bloomington, Indiana 47405

Version 2 – December 2020

TABLE OF CONTENTS

1. PRECIPITATION SAMPLING USING XAD-2 AND MIC COLLECTORS.....2

2. AIR SAMPLING HIGH VOLUME SAMPLERS.....15

3. PREPARATION OF SAMPLING MEDIA.....33

4. FORMS …….....….....35

5. SAMPLING PROTOCOL……..…….……...41

6. SITE INFORMATION……..…….43

7. ACCESS TO THE SITES……..…….47

LIST OF TABLES

TABLE 1 Target analytes in precipitation samples……..……4

TABLE 2 Target analytes in quartz fiber filters and XAD-2 resin.....….17

TABLE 3 Troubleshooting high volume air sampler .....….....29

LIST OF FIGURES

FIGURE 1 IADN United States sampling sites.....1

FIGURE 2 Schematic of the MIC precipitation collector.....7

FIGURE 3 Mechanical timer.....……....20

FIGURE 4 Electronic timer.....……...22

FIGURE 5 XAD-2 cartridge and cartridge holder.....….....26

FIGURE 6 Schematic diagram of high volume air sampler.....30

FIGURE 7 IADN sampling stations…….…....……..48

FIGURE 8 High volume sampler drawings (Different Parts)…..…….....49

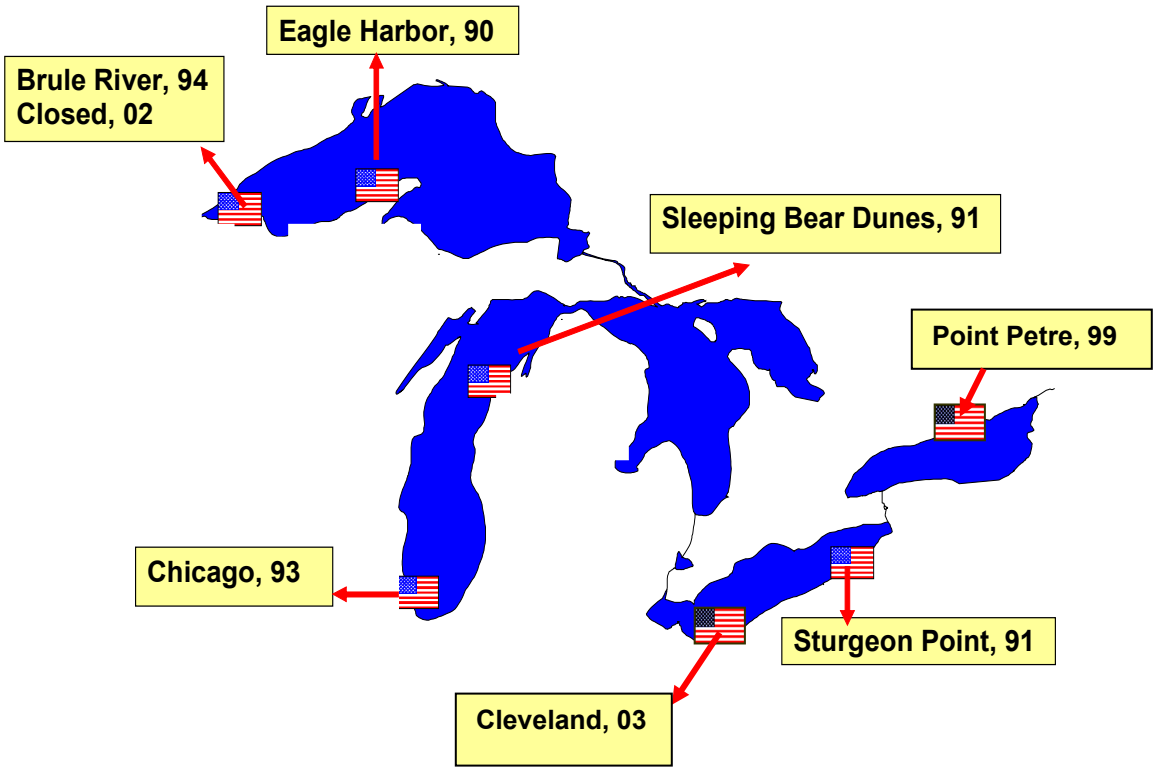

Figure 1: IADN United States Sampling Sites.

1. PRECIPITATION SAMPLING USING XAD-2 AND MIC COLLECTORS

This Standard Operating Protocol (SOP) is intended to provide a step by step procedure for collecting and replacing an XAD-2 column in a MIC B sampler.

1.1 Overview

The analyses of XAD-2 columns from the MIC (Meteorological Instruments of Canada) samplers will provide data used in the Integrated Atmospheric Deposition Network (IADN) program. The objective of the program is to determine the loadings of persistent toxic contaminants from the atmosphere to the Great Lakes from both urban and regional sources. Sampling sites have been strategically located around the Great Lakes basin to provide these estimates.

The MIC sampler is used for the collection of toxic organic compounds (polychlorinated biphenyls (PCBs), organochlorine pesticides, polycyclic aromatic hydrocarbons (PAHs), and flame retardants) in precipitation. Specific analytes of interest that will be collected from this sampler are listed in Table 1. The sampler operates continuously for 1 month beginning the first day of each month. This interval is used because of the need to collect at least 2 liters of precipitation (equivalent to about 1 inch of rainfall) in order to get a reliable measurement of the target chemicals. Because of the low concentrations, the operator must follow this protocol carefully to insure sample integrity.

The sample will be collected by passing the precipitation through a column containing an 11-14 cm bed of XAD-2 resin. The column is prepared at the Indiana University (IU), shipped to the site for exposure to the precipitation, and returned to IU for extraction and analysis of the chemicals listed in Table 1. Extraction and analysis methods are documented in laboratory SOPs.

The following procedure is used by the field operator to maintain the MIC sampler, and to remove and replace XAD-2 columns in a manner that will improve sampler integrity. Although a sample will be collected every month, the collector must be checked each week to ensure proper operation and to empty the overflow container if necessary. Any questions on the sampling methods or operation of equipment should be directed to the following individuals. The Principal Investigator will be responsible for informing the Project Manager (Derek Ager) at U.S.EPA of changes in this procedure and any problems that develop.

Principal Investigator

MartaVenier
Indiana University
MSB II, Room 322
702 N. Walnut Grove Ave.
Bloomington, IN. 47405
Phone: (812) 855-0193
Email: mvenier@indiana.edu

Co-Principal Investigator

Amina Salamova
MSBII, room 314
702 N. Walnut Grove Ave
Bloomington, IN 47405
Phone: (812) 855-2926
Email: asalamov@indiana.edu

Sampling Protocol, Supplies, Equipment, and Maintenance

James C. Bays
Indiana University
MSB II, Room 345
702 N. Walnut Grove Ave.
Bloomington, IN. 47405
Phone: (812) 856-4364
Email: jcbays@indiana.edu

Table 1. Target Analytes in Precipitation Samples

PCBs	Organochlorine Pesticides	PAHs	BFRs
84 PCBs and suite PCBs	alpha-HCH beta-HCH gamma-HCH p,p' –DDT o,p'-DDT p,p' –DDD o,p'-DDD p,p' –DDE (still?) dieldrin aldrin endrin alpha-chlordane gamma-chlordane trans-nonachlor, oxychlordane heptachloroepoxide octachlorostyrene HCB endosulfan I and II endosulfan sulfate	fluorene phenanthrene anthracene fluoranthene pyrene chrysene+triphenylene benz[*a*]anthracene benzo[*b*]fluoranthene benzo[*k*]fluoranthene indeno[1,2,3-*cd*]prrene dibenz[*a,h*]anthracene benzo[*ghi*]perylene retene coronene benzo[*e*]pyrene benzo[*a*]pyrene	45 BFRs

1.1.1. Sampling Procedure

Site operators will visit the site weekly (on Tuesdays) to check for proper functioning of equipment and to ensure that the overflow container is less than 3/4 full. Samples will be collected on the first day of the month at, or as close to 10:00 am local time as possible. If it is raining or snowing or hazardous conditions prevail, samples may be collected later in the day at the discretion of the site operator. If the first of the month falls on a weekend, the sample may be collected on the Friday previous or Monday following the first of the month. If the sample cannot be collected on the prescribed sampling day, IU must be notified. The following sampling activities will take place in the order listed:

1) Initial equipment inspection.
2) Checking the overflow container: measuring precipitation volume if necessary (in liters).
3) Rinsing and cleaning of the precipitation collection surface with deionized (DI) water (from IU).
4) Removing the XAD column and labeling it.
5) Packaging XAD column and sample repose form for shipment.
6) Cleaning collection surface with methanol (supplied by IU).
7) Installing of a new column and setting flow rate.
8) Waste disposal and clean up.
9) Sample shipment.

Steps 1and 2 will be conducted weekly: steps 1-7 will be conducted when an XAD-2 column is changed (every first of the month). Each of these steps will be detailed in the following Sections:

1.1.2. Sample Handling and Preservation

Due to the expense of sampling and analyzing the XAD-2 columns, every sample is important and represents a significant portion of the yearly program estimates. Any contamination through mishandling or lack of preservation could cause a bias in the program estimates. The XAD-2 column should remain moist with the water level between the top of the resin bed and the top of the column. If the column is broken or dry on arrival, contact IU immediately. If the column dries out during the sampling period, DI water should be added. This must be noted in the site log and on the sample data sheet. Before removal, DI water will be added to the column.

Once in, the column should be wrapped in aluminum foil for light protection and should remain wrapped for removal and shipment. Follow all procedures for sample removal, packaging and shipment.

1.1.3. Interference

Due to the nature of the chemicals being collected, all precautions should be taken to avoid contamination of the sample and sampler during weekly visits and sample collection. The sampler functions to collect precipitation samples. Therefore, the sample collection surface and the XAD column should not be exposed more than is necessary. This will minimize contamination from dry deposition of atmospheric particles. The sampler should be inspected weekly to verify that the sealing pad is staying properly with the top of the sampler.

Exposure of the XAD column to light can cause the degradation of some of the PAHs. Once installed, the XAD column must remain wrapped in aluminum foil. The XAD columns should be plugged at both ends, wrapped in the aluminum foil and bubble wrap after taking down from the sampler.

Heaters and fans are included in the sampler to avoid temperature extremes that might damage the columns or degrade the samples. Proper maintenance of the heating unit is required, and it should be checked weekly when temperatures below freezing are possible (see section 1.3.2).

1.1.4. Safety

In any field operation, emphasis must be placed on safety. Site operators must be aware of the potential safety hazards to which they are subjected. Follow all safety protocols and equipment guidelines, and be prepared for emergency situations. The site operator is responsible for his/her safety from potential hazards including but not limited to:

- Travel: When traveling to the site, be sure to check on road conditions and weather advisories. Carry emergency supplies (warm clothing, food, water) when traveling in the winter. Always let someone know where you are going and when you expect to be back. Always carry a first aid kit.

- Electrical: For obvious problems (fire, scorching, blown fuses), turn off the power for the circuit involved and notify IU. Unplug the sampler before replacing fuses and circuit boards. Do not attempt other electrical repairs. Be especially cautious if conditions are wet.

- Insect pests: If you are allergic to insect stings, you should carry a kit prescribed by a physician. Be especially cautious if nests or large numbers of stinging insects are present. Notify IU of all problems.

- Sampling procedures: Never force glassware with unprotected hands. If the column arrives broken, return it to IU. Do not attempt to remove the Teflon plugs.

- Chemicals: Methanol is toxic and should not be ingested, inhaled, or come into contact with bare skin.

1.2. Equipment and Supplies

Careful use, proper maintenance and cleaning extend the life of serviceable field equipment. Permission should be obtained from the Principal Investigator to use anything other than the equipment and supplies mentioned in these lists (supplied by IU).

1.2.1. Serviceable Equipment

These items will stay at the site at all times:

- MIC Sampler (frame, motor, rain sensor, fan assembly)
- Overflow tubing, funnel, and overflow container (25 L plastic car boy)
- Space heater -Maximum/minimum thermometer graduated cylinders (2 L and 10 mL)
- Precleaned Pyrex beaker (2 L)
- Forceps
- Teflon wash bottles (DI water and methanol)
- Standard wash bottle (tap water)
- Plastic bucket
- Spare o-rings
- Plastic bags
- Teflon column outlet valve
- Latex gloves
- Log book
- Report forms
- Sample labels and marker
- Kim wipes
- Methanol

A diagram of the MIC sampler and XAD column assembly is shown in Figure 2. General maintenance and trouble shooting are covered in section 1.5.

1.2.2. Consumable Equipment

These items will be shipped to the site operator every month:

- XAD columns and Teflon plugs
- Glass fiber filter pieces
- Test tube brush
- Shipping box and packaging materials

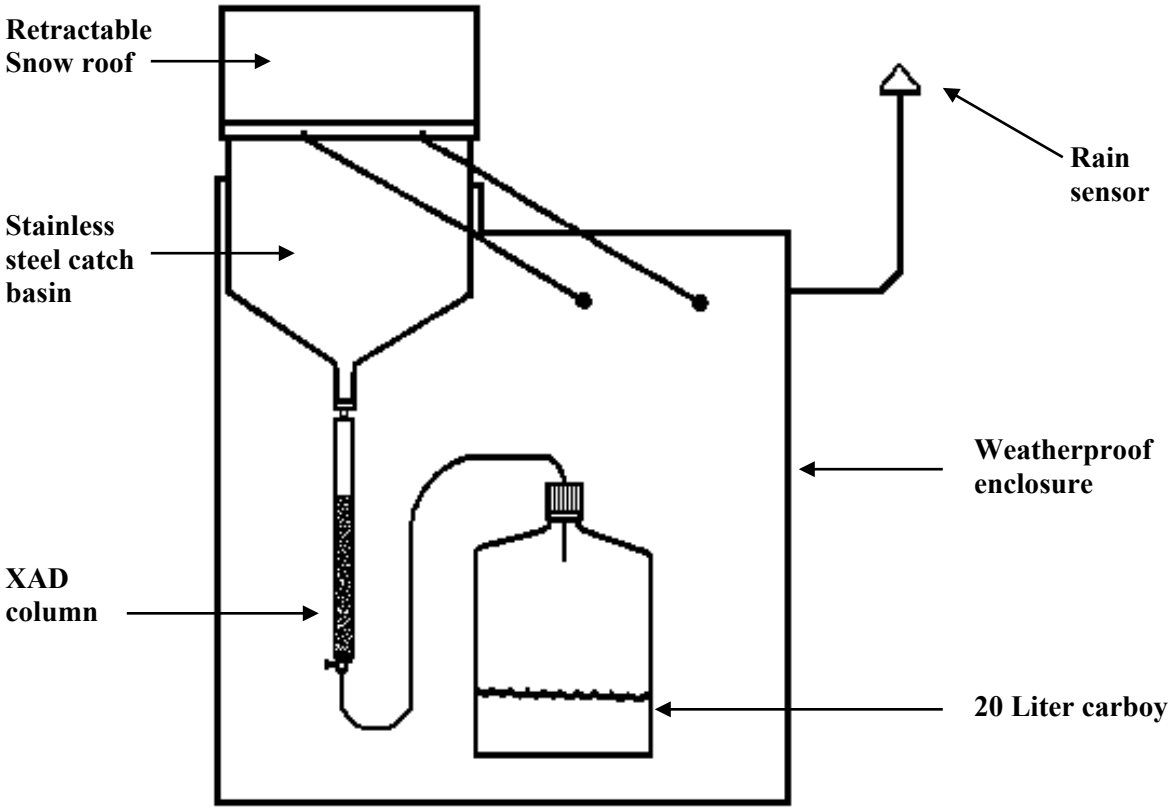

Figure 2. Schematic of the MIC Precipitation Collector.

1.3. Calibration and Standardization

1.3.1. Rain sensor

Each week check the operation of the MIC sampler. If it is dry, wet the sensor with DI water; the cover should open immediately and close within 5 minutes if no additional wetting occurs. Clean any accumulated dirt off the sensor. Do not allow the sampler to remain open any longer than necessary. See section 1.5 for more information.

1.3.2. Heater and Fan

The heater must operate properly in freezing temperatures to maintain proper operation of sampling equipment. The heater should maintain a 15 ± 5°C temperature in the sampling enclosure. The heater will be calibrated at IU. When cold weather is expected, check that the heater is operational by turning up the heater thermostat until the heater comes on; set this thermostat at the calibration mark. During warm weather, make sure that the fan is operational by turning down the fan thermostat; set this thermostat at the calibration mark. Reset the maximum/minimum thermometer and record the temperatures each week.

1.4. Procedures

The following procedures will be discussed:

1) Initial equipment inspection
2) Measurement of precipitation volume in overflow containers
3) Rinsing precipitation collection surface
4) XAD column removal and labeling
5) XAD column packaging for shipment
6) Cleaning collector surface and funnel outlet
7) Installation of new column
8) Waste disposal/clean-up
9) Sample shipment

Steps 1 and 2 will be conducted weekly, steps 1-9 will all be conducted every month when the column is changed.

1.4.1. Initial Inspection

Upon arrival at the site, make an initial inspection of the equipment to determine proper operation for the week. This inspection will be entered on the Weekly Site Visit Sheet and will include:

1) General comments: Comments that might affect the sample collection that week, i.e., fire in the area, wind storms, abnormal precipitation, vandalism, etc. If it is raining or snowing during the visit, note whether the sampler is open. If there is standing water in the funnel, or if the column has gone dry, see section 1.4.2.

2) Equipment evaluation: Note any damage to equipment. Check operation of the rain sensor if it is not raining (section 1.3.1) and the heater or fan (section 1.3.2). Check for interferences (1.1.3). Check the Teflon sealing pad on the cover of the MIC. If it is loose, cracked, or holding water, notify IU.

1.4.2. Measurement of Precipitation Volume

This procedure will be done on a weekly basis if the overflow container is more than 1/2 full. It will always be done when changing an XAD column. If possible do not perform this step during a precipitation event, since this will affect the volume estimate. If this step has to be done during an event, immediately replace the overflow container with the plastic bucket; and record the amount of precipitation that passes through the column while the water in the full container is being measured. Measure the volume in l-liter increments using the large graduated cylinder. All measurements should be recorded in the Weekly Site Visit and Field Data Sheets.

If there is standing water in the collection funnel, check that water is flowing through the column. If water is not flowing or flowing very slowly, close the valve on the column and remove it from the funnel catching the precipitation in the pre-cleaned beaker. Check for debris blocking the funnel outlet or the column outlet valve. Use the cleaning wire if necessary. Reconnect the column, adjust the flow (section 1.4.8), and allow the water collected in the beaker to pass through the column. Return the beaker to IU for recleaning. If flow cannot be restored, notify Jim Bays.

If the column has gone dry, add DI water from the Teflon wash bottle and try to determine where the leak is. Replace o-rings or tighten fittings as necessary. Note this and the approximate volume of DI water added on both the Weekly Site Visit Sheet and the Field Data Sheet.

1.4.3. Rinsing the Precipitation Collection Surface

This procedure is carried out only during XAD column removal and replacement (the first of every month). If possible, do not perform this step during a precipitation event. Wait until all precipitation has drained from the collection funnel. Wear latex gloves at all times. If the system is plugged, see section 1.4.2. If the sample must be collected during a rain even try to stand downwind of the instrument, and do not lean over the collecting surface. Starting 3/2020 both MIC units, where applicable, will undergo basin cleaning on the first of each month.

1) Squirt DI water onto the rain sensor to open the sampler. Turn off the switch on the front of the sampler so that it remains open during the procedure.

2) Wearing latex gloves, remove any obvious debris (bird droppings, leaves, etc.) from the collection funnel using reagent grade water on site. The presence of debris should be noted on the Data Sheet.

3) Rinse the collection surface with a minimum of 500mL of DI water (one wash bottle full) using kim wipes. Following this use methanol from squeeze bottle while wiping with the piece of precleaned glass fiber filter sent with the monthly supplies. This step removes adhering particles from the collection surface. Allow rinsings to pass through the column until the water level is halfway between the top of the resin bed and the top of the column (see Figure 2). If the temperature is so cold that water freezes on contact with the funnel, simply wipe off the collection surface with a dry piece of filter and go to Step 4.

4) Turn off the column outlet valve to maintain the water level in the column.

5) Be sure to turn the power switch on the front of the sampler back to the on position. Proceed to section 1.4.4.

1.4.4. Column Removal and Labeling

The aluminum foil should remain on the column.

1) Unscrew the XAD column from the fitting at the base of the collection funnel. Cap the column with a Teflon plug. Make sure the black o-ring is in place.

2) Remove the overflow tube while turning the column upside down. Remove the outlet valve fitting and replace it with a Teflon plug. Make sure the black o-ring is in place.

3) Label the column (on the outside of the aluminum foil. see section 1.4.5)

1.4.5. Labeling Codes

All precipitation samples should be labeled on the outside of the column using the same alphanumeric system. The label includes:

1) The “Site ID” letter for the site
2) the “Sample” which will be “P” for precipitation samples
3) the “Sampler #”, designating either a routine sample (01), a duplicate (02) or blank
4) the “Date” of collection (end date of sample period) in a year-month-day form

An example label and the valid codes are listed below.

Precipitation Sample

___ ____ _____ _____ _____ _____
Site Sample Sampler # Year Month Day

Valid Codes

Site ID	**Sample**	**Sampler number**
S-Sleeping Bear Dunes T-Sturgeon Point E-Eagle Harbor C-IIT Chicago L-Cleveland P-Point Petre	P-Precipitation	01- Sampler #1 for routine sample 02- Sampler #2 for duplicate Sample Field Blank will be labeled with a **B** at the end

Example: SP-0l-200119 is the code for a routine precipitation sample collected at the Sleeping Bear Dunes site on January 19, 2020. Both columns should be labeled by this coding system.

1.4.6. Column Packaging for Shipment

The columns should be packed in the shipping containers provided by IU. Normally supplies for each sampling period will come in these boxes and they can be reused to return the samples. The columns should be carefully packed using Styrofoam "peanuts" so that the contents do not shift when the package is moved. During the winter (November through April), the box should be clearly labeled "DO NOT FREEZE" so that the shipper does not store the packages outside.

1.4.7. Cleaning Collector Surface and Funnel Outlet

Prior to installation of a new column, the collection surface and funnel outlet must be cleaned.

1) Put on a new pair of gloves.

2) Place the white plastic bucket under the funnel outlet.

3) Clean the collector surface by rinsing with 200 mL of EM Science Omnisolv methanol (supplied by IU) with additional scrubbing with a clean Kimwipe if necessary. Clean the funnel outlet using the test tube brush.

4) Follow with a rinse of 1 L of tap water from the plastic wash bottle.

5) Follow with a rinse of 200 mL of DI water from the Teflon wash bottle.

6) Rinse the funnel outlet fitting and o-ring with methanol and DI water.

7) Proceed to section 1.4.8.

1.4.8. Installation of a New XAD Column

1) Remove the aluminum foil to make sure the XAD bed in the column has not separated and is packed between the glass wool plugs. If it has separated, notify IU.

2) Replace the aluminum foil and remove the Teflon plug on the bottom (unmarked) of the XAD column and replace it with the column outlet valve. Make sure the black o-ring is in place. Wrap the plug in aluminum foil and put it in a clean plastic bag for reuse when removing the column.

3) Remove the top Teflon plug (marked red) and place it, wrapped in aluminum foil, in the plastic bag. Rinse the funnel outlet fitting with methanol. Screw the top of the column into the funnel outlet fitting. Make sure the black o-ring is in place.

4) Open the collector lid by moistening the rain sensor. Add about 50 mL of DI water to the collection funnel (these steps may not be necessary if rain is falling). Make sure water is flowing from the column outlet valve at the bottom of the column. Adjust the flow to between 10 and 15 mL/min using the column outlet valve. Measure the flow using the small graduated cylinder. Connect the outlet tube to the overflow container. The water level should come to rest between the top of the resin bed and the top of the column.

5) Empty all water from the overflow container and make sure the column is wrapped with aluminum foil.

1.4.9. Waste Disposal Clean-up

Waste may include materials (water, methanol) and glass fiber filter used to clean the collection surface. Empty any leftover liquid from the Teflon wash bottles into the plastic bucket and seal them in a plastic bag until the next column change. Return the test tube brush with the samples. The water-methanol mixture in the plastic bucket is biodegradable and can be put down the drain.

1.4.10. Sample Shipping

Once they are properly packaged (1.4.6), send the samples, Field Data Sheets, and Weekly Site Visit Sheet to the Principal Investigator. Keep a copy of both Sheets in the site log book. FedEx Express is the preferred shipping method.

1.4.11. Quality Assurance Samples

Occasionally the protocol will require collection of quality assurance samples. Field blanks are columns that are connected to the sampler funnel during the sampling period. The switch on the front of the sampler is turned off so that the sampler does not open and no rain passes over the column. Field blanks should include a funnel rinse just like regular samples. Field blanks assess overall contamination including shipment, storage, and passive contamination in the sampler during dry periods.

1.5. Equipment Maintenance and Trouble Shooting

The rain sensor grids are exposed to weather, dust, dirt, and pollutants and must be kept clean to avoid malfunctions. The grids should be cleaned every week by wiping the exposed side with a damp sponge or cloth, using a mild detergent if necessary. If a detergent is used, be sure to wipe of the grid thoroughly to ensure that detergent film does not build up. The operation of the sampler should be checked each week. If the cover is not seating properly on either side or if the movement of the cover is not smooth, refer to the trouble-shooting guide below.

CAUSE	REMEDY
<u>Collector fails to Operate</u>	
No power to instrument	Check Switches and power source.
Blown fuse	Replace fuse.
Faulty PC board	Change PC board
Faulty sensor board	Change sensor board
<u>Motor will not switch off</u>	
Limit switch and or cam out of adjustment	Readjust limit switch or cam
Limit switch broken	Replace limit switch
<u>MIC Heater fails to operate</u>	
Heater element burnt out	Change sensor board
Faulty component on PC board	Change PC board
<u>Moving cover drops once it moves over top center</u>	
Loose set-screw on motor sprocket	Tighten set-screw
Chain loose	Tighten chain
<u>Cover does not return to funnel</u>	
Dirt on sensor board	Clean sensor board
Heater on the sensor not operating	See "Heater fails to operate"

1.6. Video Tutorial

A video tutorial on MIC sample setup is available here: https://www.youtube.com/watch?v=y56yTCIpJww

MIC Summary SOP

This summary does not take the place of the detailed SOP and should be used strictly to reinforce the procedure when in the field. Steps 1 and 2 will be conducted weekly; steps 1-7 will be conducted when an XAD-2 sample is required (monthly).

1) <u>Initial Equipment Inspection</u>

Upon arrival at the site make an initial inspection of the equipment to determine proper operation for the week. This inspection which will be entered into the site operators weekly activity sheet should include:

1. General Comments - Comments that might effect the sample collection activity that week
2. Equipment Evaluation - Determine whether the rain sensor and heater (see section 1.3.1 and 1.3.2) or other mechanical devices are operating properly. Check the Teflon sealing pad.
3. Record minimum/maximum temperature and reset thermometer

2) <u>Overflow Container Measurement for Precipitation Volume</u>

1. Remove overflow tubing from overflow container. If precipitation is occurring, place overflow tubing into spare overflow container.
2. Pour the contents of the overflow container into a graduated cylinder. Record each 1 liter increment and discard contents of cylinder. Repeat procedure until contents of overflow container are empty. If the column is being changed, add any additional sample in the spare overflow container, reading the final portion to the nearest 10 mL.
3. Record the total volume estimate on the Weekly Site Visit Sheet. If the container is less than 3/4 full, indicate an "N" in the appropriate space. If the visit is for removal and replacement of an XAD-column, record the total from that week OD the Weekly Site Visit Sheet, and record the total (the summation of any weekly overflow measurement during the 4-week sample collection period) on the Field Data Sheet.

3) <u>Rinsing and Cleaning of Precipitation Collection Surface</u>

This procedure occurs only during XAD-2 column removal and replacement (monthly).

1. Squirt DI water onto the rain sensor to open sampling lid and turn off the power.
2. Wearing latex gloves (and Kleen Guard coveralls if necessary), remove debris from the collection funnel. Rinse the collection surface with about 200 mL of DI water while scrubbing with a piece of glass fiber filter to remove deposited particles. Allow rinsings to pass over the column until the water level is between top of the column and the top of the resin bed (Figure 2). Close the column outlet valve to maintain water level in column and remove the outlet tubing. If the temperature is very cold, simply dry wipe with the filter.
3. Place glass fiber filter in sample jar.

4) <u>XAD 2 Column Removal and Labeling</u>

1. Unscrew the XAD-2 column from the collection funnel. Once removed, close the top with a Teflon plug. Make sure black O-ring is in place.
2. Remove column outlet valve and replace with Teflon plug. Make sure black O-ring is in place.
3. Place the column, wrapped in aluminum foil, into a plastic sampling bag.
4. Label column (on the outside the aluminum foil) with the appropriate sample code (see 1.4.5). Place samples into shipping container for protection.

5) <u>XAD Column Packaging for Shipment</u>

1. Carefully pack the columns in the shipping box with Styrofoam "peanuts". Enclose a reset Max/min thermometer in the package and prefrozen freezer packs (May through October only). During the winter (November through April), label the outside of the package "DO NOT FREEZE".

2. Ship to IU as soon as possible by Federal Express.

6) <u>Cleaning Collector Surface and Funnel Outlet</u>

1. Place new pair of gloves on.
2. Place the plastic bucket under funnel outlet.
3. Clean the collector surface by rinsing with 200 mL of pesticide-free methanol.
4. Follow with rinse of 1 L tap water. Scrub with a clean Kimwipe if necessary and use the test tube brush to clean the funnel outlet.
5. Follow with 200 mL rinse of DI water. Discard contents of overflow container.
6. Rinse funnel outlet with methanol.

7) <u>Installation of New XAD-2 Column</u>

1. Remove the Teflon plug from the bottom (unmarked) of the new column and attach the column outlet valve. Make sure black O-rings are in place. Wrap the plug in aluminum foil and put it into plastic bag until the column is removed.
2. Remove the top plug (marked with red) and wrap it with aluminum foil and place it in the plastic bag. Screw the top of the column into the funnel outlet. Make sure the black o-ring is in place.
3. Open the collector lid by moistening the rain sensor. Add about 50 mL DI water to the sample collection surface. Open the column outlet valve and adjust the flow to between 10 and 15 mL/min using the small graduated cylinder to measure the volume. If it is raining, allow the rain to flow through the system. Connect the column outlet to the overflow container using the overflow tubing.
4. Wrap the XAD-2 column tightly with aluminum foil.
5. Keep the Teflon plugs in a plastic bag within enclosure for next column removal.

8) <u>Waste Disposal/Clean-up</u>

Waste includes water, methanol, glass fiber filter, test tube brush used to clean the collector after the XAD-2 column had been removed. Pour all liquids from wash bottles and bucket into the spare overflow container, cap and dispose of properly. Enclose the DI and methanol wash bottles in a plastic bag, and return the test tube scrub brush in the sample shipment to IU. The glass fiber filter, gloves, and other trash can be properly disposed.

9) <u>Sample Shipping</u>

Once packaged properly (1.4.6) send the samples (XAD-2 column and glass fiber filter from 1.4.3 and 1.4.4), the Weekly Site Visit Sheet, and the Field Data Sheets to IU.

2. AIR SAMPLING USING HIGH VOLUME SAMPLERS

This SOP is intended to provide a step by step procedures for collecting atmospheric particles on quartz fiber filters and atmospheric gas phase contaminants on XAD-2 resin cartridges using high volume (Hi-Vol) samplers.

2.1. Overview

The data from analyses of 20.3 x 25.4 cm quartz filters and XAD-2 cartridges from the Hi-Vol samplers is collected within the Integrated Atmospheric Deposition Network (IADN) program. The objective of this program is to determine the loading of persistent toxic contaminants from the atmosphere to the Great Lakes from both urban and regional sources. Sampling sites have been strategically located around the Great Lakes basin to provide these estimates (Figure 1).

The Hi-Vol sampler is used for the collection of both vapor and particle-bound contaminants in air. Specific analytes of interest are listed in Table 2. The sampler operates for a 24 hour period at a flow rate of 34 m^3 every 12 days and the sample is collected the following week by the site operator. This interval is used because of the need to collect about 800 cubic meters of air in order to get a reliable measurement of the target contaminants at the remote sites in the network. Because of the low concentrations, the operator must follow this protocol carefully to ensure sample integrity.

The sample is collected by passing air through a 20.3 x 25.4 cm quartz filter and then through an XAD-2 resin cartridge. The sampler inlet is a standard TSP shelter. The filters, which are pre-cleaned and pre-weighed at Indiana University (IU), and the XAD-2 cartridge are shipped to the site, and returned to IU for analyses. The analytical methods are documented in the laboratory SOPs.

The following procedure is used by the field operator to maintain the Hi-Vol sampler, and to remove and replace quartz fiber filters and XAD-2 cartridges in a manner that will maintain sample integrity. Dates of operation and sample collection will be provided in the monthly site operation protocol. Generally one filter and cartridge sample will be collected every 12 days. The site must be visited each week on Tuesday to collect samples and set-up samplers for the next week's sample collection. Any questions on the sampling methods or operation of equipment should be directed to the following individuals. IU personnel will be the prime contacts for all methodological and general questions.

Principal Investigator
Marta Venier
Indiana University
MSB II, Room 322
702 N. Walnut Grove Ave.
Bloomington, IN. 47405
Phone: (812) 855-0193
Email: mvenier@indiana.edu

Co-Principal Investigator
Amina Salamova
MSBII, room 314
702 N. Walnut Grove Ave
Bloomington, IN 47405
Phone: (812) 855-2926
Email: asalamov@indiana.edu

Sampling Protocol, Supplies, Equipment, and Maintenance

James C. Bays
Indiana University
MSB II, Room 345
702 N. Walnut Grove Ave.
Bloomington, IN. 47405
Phone: (812) 856-4364
Email: jcbays@indiana.edu

Table 2. Target Analytes in Quartz fiber Filters and XAD-2 Resin.

PCBs	Organochlorine Pesticides	PAHs	TSP	BFRs
84 PCBs	alpha-HCH beta-HCH gamma-HCH p,p' –DDT o,p'-DDT p,p' –DDD o,p'-DDD p,p' –DDE dieldrin aldrin endrin alpha-chlordane gamma-chlordane trans-nonachlor, oxychlordane heptachloroepoxide octachlorostyrene HCB endosulfan I and II endosulfan sulfate	fluorene phenanthrene anthracene fluoranthene pyrene chrysene benz[*a*]anthracene benzo[*b*]fluoranthene benzo[*k*]fluoranthene indeno[1,2,3-*cd*]prrene dibenz[*a,h*]anthracene benzo[*ghi*]perylene retene coronene benzo[*e*]pyrene benzo[*a*]pyrene		45 BFRs (Started in January 2003)
XAD-2 only	**XAD-2/QFF (Chicago and Cleveland only)**	**XAD-2/QFF**	**QFF only**	**XAD-2/QFF**

Analysis of PCBs was stopped for filter samples in December 1996.
Analysis of TOC was stopped in July 1996.
Analysis of pesticides was stopped in QFF from Eagle Harbor, Sleeping Bear Dunes, and Sturgeon Point in May 2003.
Analysis of pesticides in QFF from Chicago and Cleveland are still continued.

2.1.1. Sampling Protocol

Site operators will visit the site weekly (on Tuesday) to check for proper functioning of equipment and to either collect a sample or set-up the sample collector. Samples will be collected on the scheduled day. If it is raining or snowing, or hazardous conditions prevail, samples may be collected later in the day at the discretion of the site operator. If the sample cannot be collected on the prescribed sampling day, the IU personnel must be notified. The following sampling activities will take place in the order listed.

1) Initial equipment inspection and testing.
2) Filter/cartridge removal and labeling.
3) Packaging filter/cartridge and sample report form for shipment.
4) Installation of a new filter/cartridge and setting flow rate.
5) Resetting the sampler timer.
6) Waste disposal and clean up.
7) Sample shipment.

Steps 1-3, 6 and 7 will be conducted when the filters are changed and steps 1 and 4 will be conducted during collector set-up. Each of these steps will be detailed in the following sections.

2.1.2. Sample Handling and Preservation

Due to the expense of sampling and analyzing the quartz filters and XAD-2 cartridges, a limited number of sites have been selected in order to achieve the goals of this study. Therefore, every sample is important and represents a significant portion of that site's yearly estimate. Any contamination through mishandling or lack of preservation could cause a bias in the program estimates. The filter/cartridge should only be removed from, and installed into the holders in an enclosed area. The cartridges should be at the same temperature as the holders to avoid a tight fit due to thermal expansion**.**

Once in place, the filters should not be removed until the end of the sampling cycle (one 24-hour sampling period over a 12 day period). Follow all procedures for filter removal, packaging and shipment.

2.1.3. Interferences

Due to the nature of the chemicals being collected, all precautions should be taken to avoid contamination of the sample and sampler during weekly visits and sample collection. The sampler functions to collect samples of airborne particles that will be analyzed for the parameters listed in Table 2. It is very important to avoid touching the filters and to prevent any dust or dirt from contaminating the deposit on the filter. The surfaces on the Hi-Vol inlet should be inspected each week and any dust or dirt wiped away with a damp cloth.

2.1.4. Safety

In any field operation, emphasis must be placed on safety. Site operators must be aware of the potential safety hazards to which they are subjected. Follow all safety protocols and equipment guidelines, and be prepared for emergency situations. The site operator is responsible for his/her safety from potential hazards including but not limited to:

- Travel: When traveling to the site, be sure to check on road conditions and weather advisories. Carry emergency supplies (warm clothing, food, water) when traveling in the winter. Always let someone know where you are going and when you expect to be back. Always carry a first aid kit.

- Electrical: For obvious problems (fire, scorching, blown fuses), turn off the power for the circuit involved and notify IU. Never attempt electrical repairs other than replacing fuses and circuit boards. Unplug the sampler before making replacements. Be especially cautious if conditions are wet.
- Insect pests: If you are allergic to insect stings, you should carry a kit prescribed by a physician. Be especially cautious if nests or large numbers of stinging insects are present. Notify IU of all problems.

2.2. Equipment and Supplies

Careful use, proper maintenance and cleaning extend the life of serviceable field equipment. Permission should be obtained from the Principal Investigator to use anything other than the equipment and supplies mentioned in this list (supplied by IU).

2.2.1. Serviceable Equipment

These items will stay at the site at all times.

- Organics Hi-Vol sampler (pump and timer unit, sample saver,inlet shelter)
- Filter holder with snap-on cover
- XAD-2 cartridge holder
- Fine forceps

2.2.2. Consumable Equipment

These items will be sent to the site operator in bulk or once every 4 weeks.

- Pre-weighed, numbered quartz fiber filters
- XAD-2 cartridges
- XAD-2 transport tins
- Teflon tape
- Black electrical tape
- Latex gloves — whenever it is necessary
- Spare fuses — whenever it is necessary

2.3. Calibration and Standardization

The Hi-Vol sampler will be checked three times a year against a standard orifice calibrator. This will be done in April, August, and November by IU personnel (James C. Bays). A magnehelic gauge provides a flow check before and after each sampling run.

2.3.1. Sampler Inlet

Each week check the condition of the sampler inlet and the quartz fiber filter cover plate. Wipe up any dust and dirt using a damp Kim wipe.

2.3.2. Timer and Pump Unit

Figure 3 shows the mechanical timer and Figure 4 shows the electronic timer. Each week check the operation of the timer and pump. The following checks should be made:

1) The time of day should be correct to local time.
2) The Total Sampling Time should have advanced 24 hours (1440 minutes) from the previous week, if a sample period was programmed during the preceding week. Turn on the pump manually (see section 2.4.1) and let it run for 2 minutes to determine magnehelic reading.

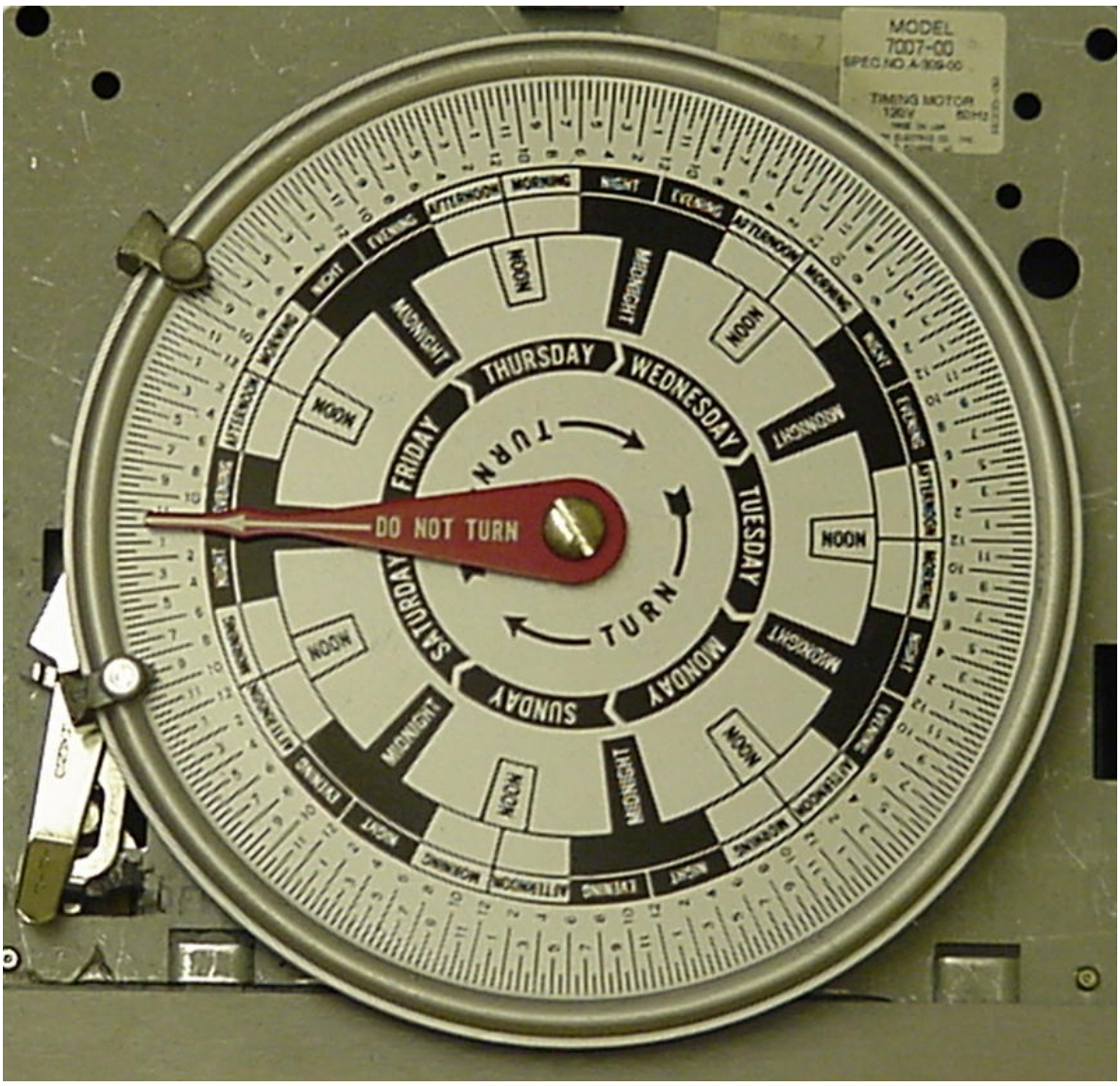

Figure 3. Mechanical Timer.

2.4. Procedures

The following procedures will be discussed:

1) Initial Inspection.
2) Filter/cartridge removal and labeling.
3) Filter/cartridge packaging for shipment.
4) Installation of new filter/cartridge.
5) Setting the clock and sample timer.
6) Waste disposal/clean-up.
7) Sample shipment.

Steps 1-3, 6 and 7 will be conducted when the filters are changed (every 2 weeks) and steps 1 and 4-6 will be conducted during collector set-up. Each of these steps will be detailed in the following sections.

2.4.1. Mechanical Timer: Initial Inspection

Note: this timer is on most of the Hi-Vol samplers

Upon arrival at the site, make an initial inspection of the equipment to determine proper operation for the week. This procedure is accomplished every week. When a sample is set up, this procedure should be used to check final settings before leaving the site. Refer to Figure 3 for timer details. Check the elapsed time counter reading on the lower left corner of the timer. Record this number on the Site Visit Sheet. The counter reads in hundredths of an hour. The large red arrow should point to the correct day and time. Note any discrepancies in the site log and on the Field Data Sheet. The switch trippers should be firmly attached to the timer rim with the silver tripper at the last scheduled start time and the black tripper at the last scheduled stop time.

Turn the sampler on by moving the HAND TRIP switch to the "ON" position and note whether the pump is running normally. During the seasonal period from April to November the mechanical filter cover plate, i.e. Sample Saver, should retract at this point when powered on. After two minutes, record the value on the magnehelic on the Field Data Sheet and the Weekly Site Visit Sheet. Turn the sampler off after 2 minutes. The hinged Sample Saver cover plate should return to its filter covering position with power off.

This inspection which should be entered into the Weekly Site Visit Sheet and the Field Data Sheet will include:

1) General comments, including comments that might affect the sample collection that week (i.e., fire in the area, wind storms, abnormal precipitation, vandalism, etc).

2) Equipment evaluation. Note any damage to equipment. If the sampler is not operating properly, notify IU as soon as possible.

3) Magnehelic reading.

4) TOTAL SAMPLING TIME reading.

2.4.2. Electronic Timer: Initial Inspection.

Note: This timer is installed in some of the Hi-vol samplers

Upon arrival at the site, make an initial inspection of the equipment to determine proper operation for the week. This procedure is accomplished every week. When a sample is set up, this procedure should be used to check final settings before leaving the site. Refer to Figure 4 for timer details. Check the timer to confirm that the following settings:

- The "POWER" switch should be "ON"
- The "SET" switch should be on "DISPLAY"
- The "DISPLAY" switch should be in "TIME OF DAY" position
- The "SAMPLER" switch should be in "TIMER" position
- The "SAMPLE AFTER" should be on the setting required on the previous week.
- The "SAMPLE EVERY" switch should be on 9 day setting.
- The "SAMPLE FOR" switch should be on the 24 hour setting.

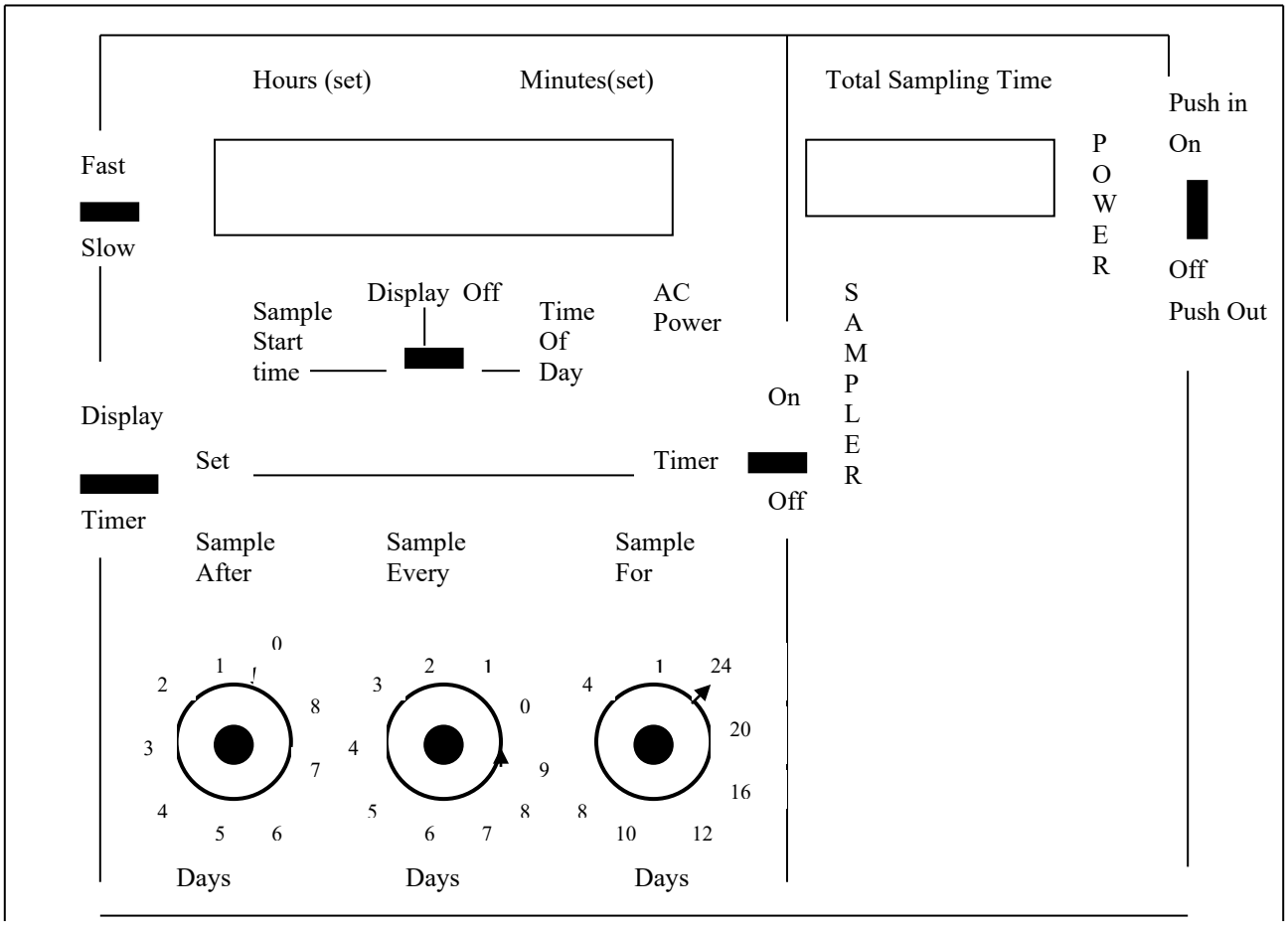

Figure 4. Electronic Timer.

2.4.2. Electronic Timer: Initial Inspection, (Cont'd)

If, on the prior week, the sampler was set to collect a sample, the TOTAL SAMPLING TIME reading on the timer should have advanced 1440 minutes. Check this reading and record it on the Site Visit Sheet.

Turn the sampler on by moving the "SAMPLER" switch to the "ON" position and note whether the pump is running normally. After two minutes, record the value on the magnehelic on the Weekly Site Visit Sheet and the Field Data Sheet. Turn the sampler off after 2 minutes.

This inspection which should be entered into the Weekly Site Visit Sheet and the Sample Data Sheet will include:

1) General comments. Comments that might affect the sample collection that week, i.e., fire in the area, wind storms, abnormal precipitation, vandalism, etc.
2) Equipment evaluation. Note any damage to equipment. If the sampler is not operating properly, notify IU as soon as possible.
3) Magnehelic reading
4) TOTAL SAMPLING TIME reading.

2.4.3. Filter/Cartridge Removal and Labeling

At the end of a sampling cycle, the filter and cartridge are removed by the following procedure. The quartz fiber filter should not be touched, and should be placed in aluminum foil as soon as possible. The following procedures are accomplished only during the replacement of the filter/cartridge.

2.4.4. Quartz fiber Filter Removal

1) Turn on the sampler manually and record the magnehelic gauge reading after 2 minutes.

2) Lift the triangular hood of the sampler in order to extract the filter holder. The filter is protected by a filter cover plate that exposes the filter during the sampling period, (this is also called the sample saver). This plate should be covering the filter. While unscrewing the filter holder leave this plate down. Remove the filter holder from the sampler by unscrewing the nuts on the corners of the holder in a diagonal pattern. Let the nuts fall to side, freeing the filter holder.

3) Lift the filter cover plate and remove the filter holder. Place the snap-on filter cover over the filter holder to protect the filter from dust when transporting it to the enclosure. Close the sampler hood and transport the filter holder to an enclosed area.

4) Once in an enclosed area, remove the snap-on filter cover. Remove the quartz fiber filter by unscrewing the outer casing of the filter holder which is held on by nuts on the short sides of the filter holder.

5) Place latex gloves on. Remove the filter, using tweezers, and fold it in half lengthwise with the deposit side facing in. Wrap the filter securely in the same piece of aluminum foil that the filter originally came in (the dull side of the foil should face the filter). Attach a label on the outside of the aluminum foil and place the filter in a zip-lock plastic bag.

2.4.5. XAD-2 Cartridge Removal

Refer to Figure 5, Pg. 26

1) Open the front door of the sampler, exposing the cartridge holder. To remove holder, loosen the hand screw nut on the top of the cartridge holder. Once the top has been completely loosened and is off, proceed to unscrew the bottom nut. This nut remains on the cartridge holder. Remove the cartridge holder and transport the holder to an enclosed area.

2) Once inside the enclosure, turn the cartridge holder upside down in order to remove the stainless steel cartridge containing the XAD-2 resin. Wrap the XAD-2 cartridge in aluminum foil and place the resin cartridge into the resin cartridge transport tin. Seal the tin by placing a piece of Teflon tape around the area where the top and bottom meet. Cover this with black electrical tape. Place a label on the tin.

2.4.6. Sample Labeling

All organics Hi-Vol air samples should be labeled using the same alphanumeric system. The label includes:

- The "Site ID" letter for the site,
- The "Sample" which will be "H" for Hi-Vol samples.
- The "Sampler#" designates whether the sample is collected with sampler 1 or 2. Usually sampler #1 is used for routine sample collection. Sampler 2 is used for duplicate sample or field blank.
- The "Matrix" designation, "F" for the quartz fiber filter and "C" for the XAD-2 resin cartridge and,
- The "Date" of collection in a year-month-day format (day when the sampling ends).

An example label and the valid codes are listed below.

Hi-Vol Sample

___	_____	_____	_____	_____	_____	_____
Site	Sample	Sampler #	matrix	Year	Month	Day

Valid Codes

Site ID	**Sample**	**Sampler #**	**Matrix**
L-Cleveland	H=Hi-Vol	01-sampler #1 for routine sample	C-XAD Cartridge
S-Sleeping Bear Dunes		02- Sampler #2 for duplicates and blank	F-Filter
T-Sturgeon Point		Field Blank ends with B.	
E-Eagle Harbor			
C-IIT Chicago			
P-Point Petre			

Example: **SH-01C-200119** is the code for a routine organics Hi-Vol vapor sample collected at the Sleeping Bear Dunes site from sampler 1. The sampler ran from January 18th through January 19th, 2020.

2.4.7. Filter Packaging for Shipment

The filter and cartridge should be shipped in a box with packing material. They may be shipped together with other samples. The filter should be protected by enclosing it in cardboard.

2.4.8. Installation of New Filter/Cartridge

At the start of a new sampling cycle, a new filter and cartridge should be installed. The monthly site protocol will list the dates that installation of the filter and cartridge is to take place.

2.4.9. Quartz Fiber Filter Installation

1) Examine the filter holder. It should be wiped clean with a damp (DI water) cloth if necessary.

2) Put on a pair of latex gloves. Within the enclosure, unwrap one of the pre-weighed Quartz fiber filters and place it in the filter holder with a pair of tweezers numbered side facing up. Save the aluminum foil in a plastic bag for use when returning the exposed filter.

3) Close the filter holder by tightening the screw nuts on either side of the holder.

4) Place the filter cover over the filter holder for transport to the sampling device.

5) At the sampling device, lift up the sampler hood and Sample Saver cover plate, (April-November). Remove the snap-on filter cover and place the filter holder into the proper position.

6) Place the filter holder nuts onto the filter holder and tighten diagonally. Place the filter cover plate over the filter holder and close the sampler hood.

2.4.10. XAD-2 Cartridge Installation

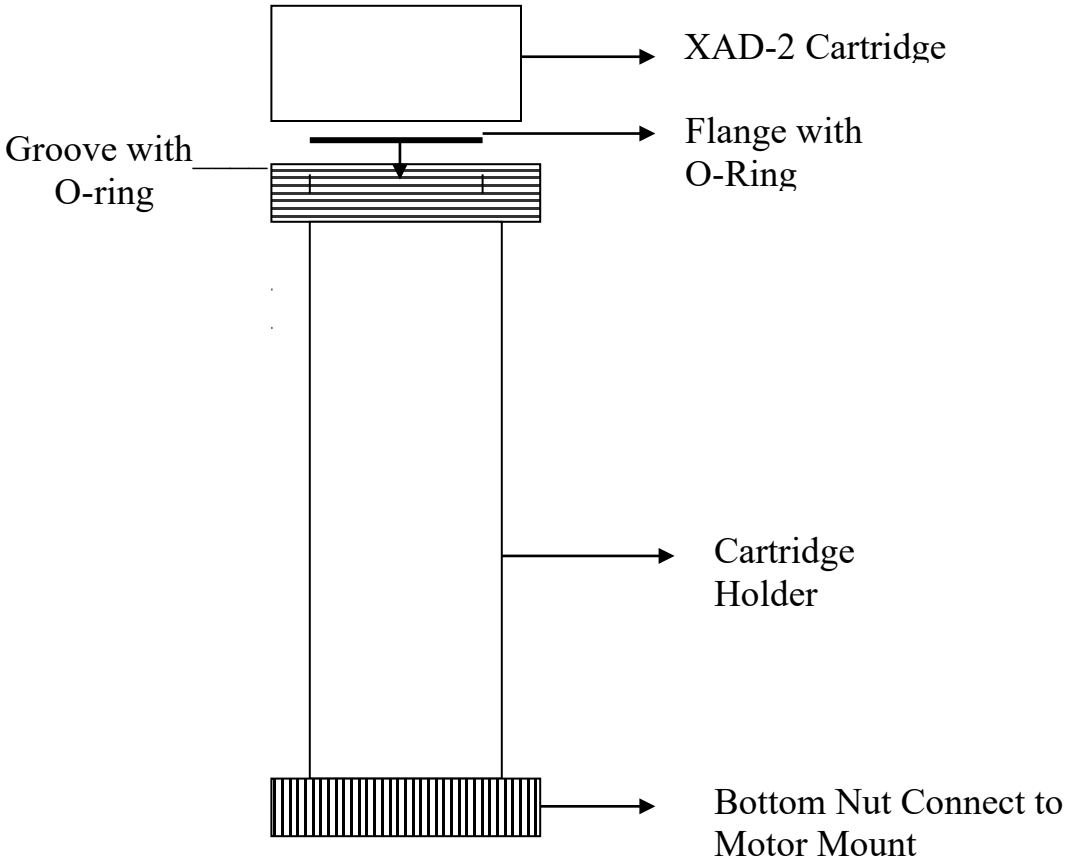

Figure 5. XAD-2 Cartridge and Cartridge Holder

1) Put on a pair of latex gloves. Within the enclosure, open a new resin cartridge sampling tin and unwrap the aluminum foil.

2) Place the XAD-2 cartridge into the cartridge holder with the flange facing down. Transport the cartridge holder to the sampler.

3) At the sampler, open the sampling door, make sure the orange o-ring at the bottom of the cartridge holder is seated in the proper groove. Install the cartridge holder, bottom end first, screwing the hand screw nut on the cartridge holder onto the motor mount which is attached to the pump/motor.

4) Make sure the orange o-ring at the top of the cartridge holder is in place and screw the top of the cartridge holder into place by holding the cartridge holder steady and using the inlet throats hand screw nut to tighten onto the threaded end of the cartridge holder.

5) Turn the sampler on. If the motor does not run smoothly, there may be a leak. Retighten the fittings on the filter and cartridge holders. Once the motor is running smoothly, record the magnehelic reading after 2 minutes.

2.4.11. Setting the Clock and the timer (mechanical timer)

This procedure is used during sample set-up in samplers with mechanical timers. Refer to Figure 3 for timer details.

1) Turn the large ring clockwise so that the red pointer points to the correct day and time.

2) Attach the switch trippers to the timer ring. The SILVER colored tripper should be positioned at the start day and time and the BLACK tripper on the end day and time specified in the monthly site protocol. The trippers should be attached so that the thumb screw is to the front. The screws should be hand tightened so that the trippers rest firmly against the rim of the ring.

3) Be sure to record the elapsed time reading.

2.4.12. Setting the Clock and the Timer (electronic timer)

This procedure is used during sample set-up in samplers with electronic timers. Refer to Figure 4 for timer details.

1) Check whether the "TIME OF DAY" display is correct.
2) Toggle to the "SAMPLE START TIME" and see if this reads "09.00". Record any deviations on the site log and on the sample data sheet. To reset either setting, place the "DISPLAY" switch to the proper setting and use the "FAST/SLOW" toggle to make adjustments. The "TIME OF DAY" should be the current time using military units. The "SAMPLE START TIME" should be set to "09.00". The sample start time must be at least 30 minutes after the time of day and THE FUNCTION SWITCH MUST BE LEFT IN THE "TIME OF DAY" POSITION.

To set up the sample run:

1) Position the "SAMPLE AFTER" switch to the number of days to be skipped before the start of the first sampling period. This position will change each week and will need to be calculated from the sampling date specified in the monthly site protocol. Position "0" will initiate sampling the first time the "TIME OF DAY" equals "SAMPLE START TIME". For example if the present time is 10:00 and the sample start time is 09:00 sampling will start 23 hours later. If position "1" is selected, sampling will start 1 day + 23 hours later at 9.00.

2) The "SAMPLE EVERY" switch sets the sampler to repeat the sampling cycle after the indicated number of days. This switch should be left in the maximum position (9 days) unless otherwise directed.

3) The "SAMPLE FOR" switch sets the sampling time in hours and should be left at the 24-hour setting unless directed otherwise.

Note: Some of the samplers have positive detent switches rather than knobs. These must be seated in the detent to control the sampler.

4) Set the "SAMPLER" switch to the "TIMER" position.
5) Finally, push the "SET" switch down to the TIMERS position momentarily and release. This enters the new sampling program. This initializes all timing functions. These steps must be done last, after all other switches have been set.
6) Be sure to record the TOTAL SAMPLING TIME reading.

Check the timer to confirm the following settings:

- The "POWER" switch should be "ON"
- The "SET" switch should be on "DISPLAY"
- The "DISPLAY" switch should be in "TIME OF DAY position
- The "SAMPLER" switch should be in "TIMER" position
- The "SAMPLE AFTER" should be on the setting required for the next sampling period.
- The "SAMPLE EVERY" switch should be on 9 day setting.
- The "SAMPLE FOR" switch should be on the 24 hour setting.

2.4.13. Waste Disposal and Clean-up

Waste may include materials used to clean the inlet and packaging materials. Dispose of these properly.

2.4.14. Sample Shipping

Once they are properly packaged (2.4.4), send the samples, Sample Data Sheets, and the Weekly Site Visit Sheet to Indiana University. Keep a copy of the both Sheets in the site logbook. FedEx Express is the preferred shipping method. U.S. Priority mail may also be used.

2.4.15. Quality Assurance Samples

Occasionally the protocol will require the collection of quality assurance samples. Field blanks are filters and cartridges that are installed in the sampler during the sampling period. The sampler should be unplugged or the silver tripper removed so that the sampler does not run. On samplers with electronic timers, the "SAMPLER" switch is turned off so that the sampler does not run. These samples should have a "B" in the sample code (section 2.4.2.3). They are run to assess overall contamination during periods when the cartridge and filter are installed in the sampler but no air is being sampled. Specific instructions will be included in the shipping box for the implementation requirements of these samples.

2.5. Equipment Maintenance and Trouble Shooting

The sampler is exposed to weather and windblown dust and should be cleaned each week by wiping dirty surfaces with a clean damp cloth.

The operation of the sampler should be checked each week. If the pump does not run or there is a problem with the timer display, consult the trouble shooting guide below and contact IU.

On samplers with electronic timers, a flashing timer indicates that a power failure has occurred. Reset the timer and notify IU.

2.6. Video tutorial

A video tutorial on Hi-Vol sample setup is available here: https://www.youtube.com/watch?v=w2SUer9zAFQ

Table 3. Troubleshooting High Volume Air Sampler.

Symptom/Cause	Remedy
Sampler fails to operate. No power to instrument.	Check switches and power source. Reset circuit breaker.
Circuit breaker continues to break. Electrical short	Instrument needs servicing.
Motor speed not steady. Air leak	Tighten filter holder screws and cartridge holder nuts.
Timing or programming error. "SAMPLER" switch not on "TIMED", or "SAMPLE EVERY" not in proper position "DISPLAY" switch not on "TIME OF DAY"	Check that the switches are in detents and all instructions have been followed (see section 2.4.5.2).

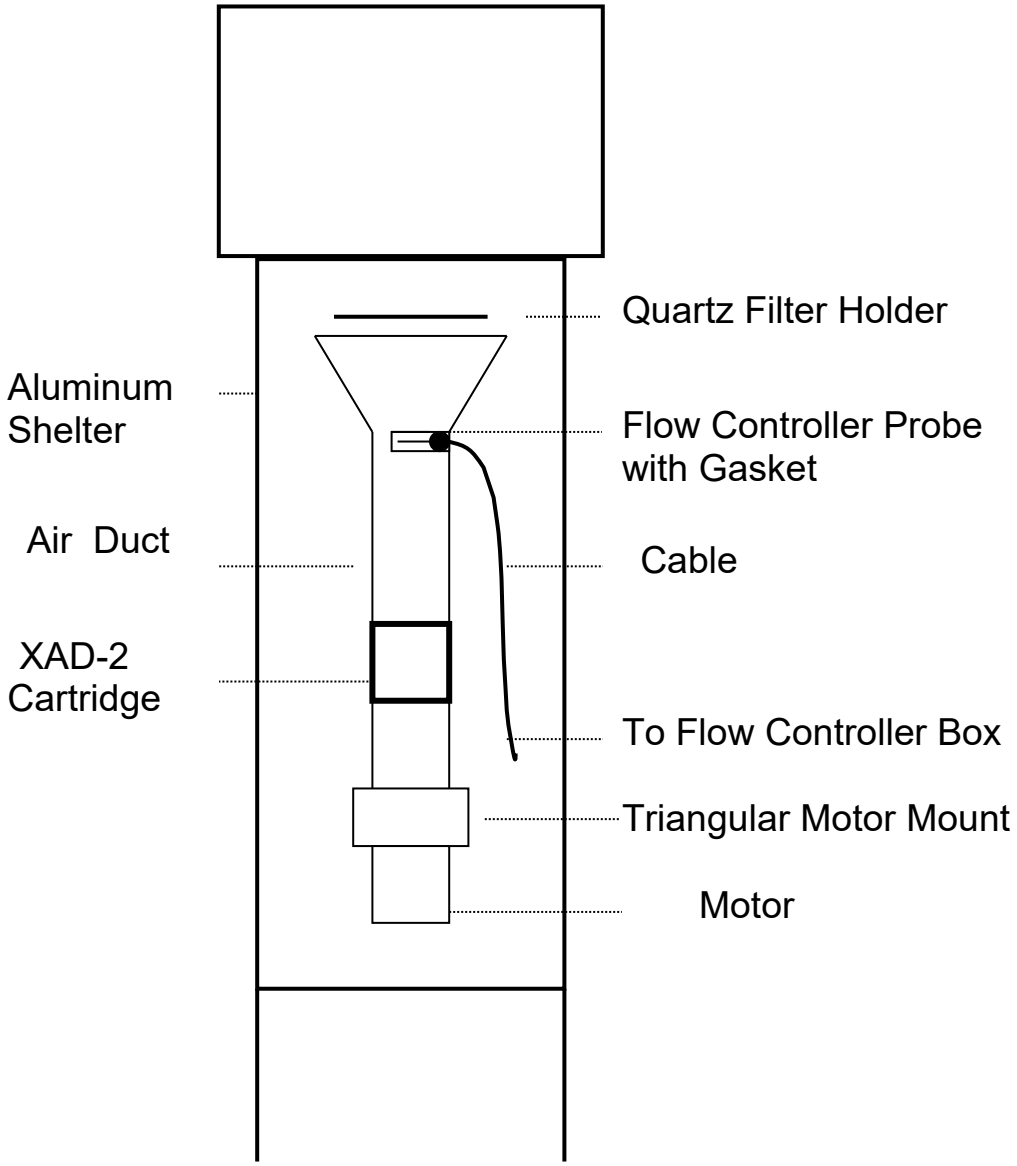

Figure 6. Schematic Diagram of High Volume Air Sampler.

High Volume Air Sampler SOP Summary

This summary does not take the place of the detailed SOP and should be used strictly to reinforce the procedure when in the field. Steps 1-3 will be conducted when the filters are changed, and steps 1, 4 and 5 during collector setup.

1. Initial inspection.

Upon arrival at the site, make an initial inspection of the equipment to determine proper operation for the week. This inspection will be entered into the Weekly Site Visit Sheet.

1. General comments. Comments that might affect the sample collection that week, i.e., fire in the area, wind storms, abnormal precipitation, vandalism, etc.
2. Equipment evaluation. Note any damage to equipment. If the sampler is not operating properly, notify Ias soon as possible.
3. Clean sampler inlet.
4. Magnehelic reading.
5. TOTAL SAMPLING TIME reading.

2. Filter and cartridge removal and labeling

Quartz fiber filter removal

1. Turn on the sampler and record the magnehelic reading after 2 minutes.
2. Lift the triangular hood of the sampler in order to extract the filter holder. The filter is protected by a filter cover plate that exposes the filter during the sampling period. This plate should be covering the filter. While unscrewing the filter holder leave this plate down. Remove the filter holder from the sampler by unscrewing the nuts on the corners of the holder in a diagonal pattern. Let the nuts fall to side, freeing the filter holder.
3. Lift the filter cover plate and remove the filter holder. Quickly place the snap-on filter covering over the filter holder to protect the filter from dust when transporting it to the enclosure. Close the filter hood and transport the filter holder to an enclosed area.
4. Once in an enclosed area, remove the snap-on filter cover. Remove the quartz fiber filter by unscrewing the outer casing of the filter holder which is held on by nuts on the short sides of the filter holder.
5. Put latex gloves on. Remove the filter with tweezers and fold the filter in half lengthwise with the deposit side facing in. Wrap the filter securely in the same piece of aluminum foil the filter came with, attach a label to the aluminum foil, and place the filter in a zip-lock plastic bag.

XAD-2 cartridge removal

1. Open the front door of the sampler, exposing the cartridge holder. To remove holder, loosen the hand screw nut on the top of the cartridge holder. Once the top has been completely loosened and is off, proceed to unscrew the bottom nut. This nut remains on the cartridge holder. Remove the cartridge holder and transport the holder to an enclosed area.
2. Once inside the enclosure, turn the cartridge holder upside down in order to remove the stainless steel cartridge containing the XAD-2 resin. Wrap the XAD-2 cartridge in aluminum foil and place the resin cartridge into the resin cartridge transport tin. Seal the tin by placing a piece of Teflon tape around the area where the top and bottom meet then secure with electrical tape. Attach a label to the outside of the transport tin.

3. Filter packaging for shipment

The filter and cartridge should be shipped in a box with packing material. They may be shipped together with other samples.

4. Installation of new filter and cartridge

At the start of a new sampling cycle, a new filter and cartridge should be installed. The monthly site protocol lists the dates for installation and sampling.

Quartz fiber filter installation

1. Put on a pair of latex gloves. Within the enclosure, unwrap the aluminum foil from a pre-weighed filter and place it in the filter holder with a pair of tweezers, numbered side facing up. Save the aluminum foil in a plastic bag.
2. Close the filter holder by tightening the screw nuts on either side of the holder.
3. Place the snap-on filter covering over the filter holder for transport to the Hi-Vol sampler.
4. Lift up the sampler hood and the filter cover plate. Remove the snap-on filter covering and place the filter holder into the proper position.
5. Place the filter holder nuts (1-4) onto the filter holder and tighten diagonally. Place the filter cover plate over the filter holder and close the sampler hood.

XAD-2 Cartridge Installation-

1. Within the enclosure, open a new resin cartridge sampling tin and unwrap the aluminum foil.
2. Place the XAD-2 cartridge into the cartridge holder with the flange facing down. Transport the cartridge holder to the sampler.
3. At the sampler, open the sampling door, make sure the bottom o-ring is properly seated, and install the cartridge holder, bottom end first, screwing the hand screw nut on the cartridge onto the threaded pump device.
4. Make sure the top o-ring is properly seated. Screw the top of the cartridge holder into place by holding the cartridge holder steady and using the hand screw nut to tighten onto the threaded end of the cartridge holder.
5. Turn on the sampler to check for leaks; record the magnehelic reading 2 minutes after the motor is running smoothly.

5. Setting the clock and the timer

<u>Mechanical Timer:</u>

- Turn the timer ring so that the red pointer points to the correct day and time.
- Position the switch trippers so that the SILVER-colored tripper is at the start day and time and the BLACK tripper at the end day and time specified in the site protocol.
- Make sure the thumb screws face out and are hand-tightened so that the trippers are firmly attached to the rim of the ring.
- Be sure to record the reading on the elapsed time counter.

For samplers with electronic timers refer to section 2.4.1.2.

3. PREPARATION OF SAMPLING MEDIA

(RAIN COLUMNS, QUARTZ FIBER FILTERS, AND XAD-2 CARTRIDGES)

3.1. Rain Columns for MIC sampler

3.1.1. Supplies

- Glass rain columns: Chromatographic columns (Ace Glass Inc. 5820-16)
- 15 mm threaded teflon plugs
- "O" rings for the teflon plugs
- Teflon adapter with valves
- Muffled glass wool
- Water: EM Science Omni Solv grade
- Beakers
- Tweezers
- Aluminum foil
- Stand and clamp
- Pre-cleaned wet XAD-2: Amberlite XAD-2 resin, 20-60 mesh size, pore diameter 90 A^0

3.1.2. Procedure

- Attach the column to a clamp stand.
- Attach the teflon valve at the bottom end to control the flow.
- Pack glass wool to about 1/4".
- Pour water in to check, and adjust the flow.
- Fill the column with wet XAD-2 (11-14 CMS in length) and let it settle. Tap the column gently to get better packing. Never let the XAD-2 get dry.
- Put another plug of glass wool on the top.
- Put water on the top of the column and screw in the teflon plug with "O" ring.
- Turn it upside down, take the adapter valve off and put another teflon plug in place of the valve.
- Make sure that the o-ring on the teflon plug makes a good seal.
- Cover it first with Aluminum foil and then with bubble wrap.
- Store them at 4° C until shipping.

3.2. Quartz Fiber Filter for High-Vol Air Samplers

3.2.1. Supplies

- Quartz fiber filter: Whatman 8x10 inch, QM-A
- Humidity chamber: Lab Line Descicab No 1477 with saturated solution of Lithium Nitrate to maintain 50% relative humidity.
- Balance: Mettler AE50 with a filter chamber and a hanger underneath.
- Muffle furnace: Thermolyne 30400 type
- Gallon size plastic ziplock bags
- Aluminum foil
- Tweezers

3.2.2. Procedure

Avoid touching the filter. Always use tweezers.

- Wrap quartz fiber filters with aluminum foil and make sure that the sides are not damaged.
- Heat the wrapped filters at 450° C for 4 hours in the muffle furnace.
- Store them at -20° C.
- Take them out of the freezer 48 hours before shipping and put them in the humidity chamber for 24 hours, with the aluminum foil slightly opened.
- After it has been equilibrated with 50% humidity for 24 hours. Put a filter ID on the upper right hand corner of the filter with a pencil. Put it into the filter chamber of the balance, using tweezers, and take the weight. Take three weights to get a good average.
- Record the filter ID and the initial weight in the filter book.
- Wrap the filter again in the same foil. Write the filter ID on the aluminum foil with a marker.
- Put the filter in aluminum foil in a ziplock plastic bag and store it at -20° C until shipping.
- Place the filter in a book mailer for mailing to the site.
- Calibrate the balance with a set of external weights ranging from 2mg to 200mg once a month. Check the internal calibration once every two weeks.

3.3. XAD-2 cartridges for Hi-vol air samplers

3.3.1. Supplies

- Pre-cleaned dry XAD-2
- Stainless steel cartridges- wrapped in aluminum foil and muffled
- Screens- wrapped in foil and muffled
- Aluminum rings for the cartridges solvent cleaned and wrapped in foil (Do not muffle the aluminum rings)
- Tweezers
- Tin cans
- Teflon tape
- Black electric tapes

3.3.2. Procedure

- Take a muffled stainless steel cartridge.
- Carefully unwrap the foil.
- Put a screen and retainer ring at one end. Pour 40g of pre-cleaned XAD-2. Put another screen and retainer ring on the other end. Check to make sure no XAD-2 is leaking. Always handle the screens with tweezers to avoid contamination.
- Wrap the XAD-2 cartridge in the same foil it was muffled in. If necessary, use some extra foil. Place the whole cartridge in a tin ointment can rinsed with solvent. Seal the cover first with teflon tape and then with black electrical tape.
- Store them at -20° C until shipping.
- Record the batch number of the XAD-2 used for making the cartridges, in the sampling protocol book.

4. FORMS AND SITE INFORMATION

The following pages contain an example of the Weekly Site Visit form, the Field Data form, the field log sheet, and a sampling protocol. Operator rotation check list and supplies check list are also included. This section also contains a description of the site and the site operator's address and phone number. Directions to the sites are also described.

INTEGRATED ATMOSPHERIC DEPOSITION NETWORK

WEEKLY SITE VISIT SHEET

Instructions: Fill in all applicable spaces, enter general weather conditions (sunny, rainy, etc.) and estimate values for weather variables. Enter "OK" after *Operation* for each sampler tested, if the sampler is operating properly; if there is a problem enter "X" and describe the problem at the bottom of the page. For the HiVols, fill in the *Timer* and *Magnehelic* readings in the appropriate spaces. For the MICs, enter the temperature inside the sampler and the approximate volume in the carboy. For ADS-120 samples, note the volume at time of collection if it is greater than 950 mL, otherwise indicate "<950 mL". For all samples, indicate with an "X" whether a sample was collected this week and if the sampler was set up for another run. Indicate with an "OK" if the wind vane is pointing in the proper direction and if the anemometer is turning.

Station: _____ **Date:** _____ **Time:** _____

Weather: _____ Temp: _____ Wind Dir: _____ Wnd Spd: _____ Bar Press: _____

HiVol 1	Operation	_____	Timer	F: _____ E: _____	Magnehelic	_____	Sample:	Collected	_____	Set Up	_____
HiVol 2	Operation	_____	Timer	F: _____ E: _____	Magnehelic	_____	Sample:	Collected	_____	Set Up	_____
HiVol D	Operation	_____	Timer	F: _____ E: _____	Magnehelic	_____	Sample:	Collected	_____	Set Up	_____
MIC 1	Operation	_____	Temp	_____	Volume	_____	Sample:	Collected	_____	Set Up	_____
MIC 2	Operation	_____	Temp	_____	Volume	_____	Sample:	Collected	_____	Set Up	_____
ADS-120	Operation	_____			Volume	_____	Sample:	Collected	_____	Set Up	_____
PASSIVE							Sample:	Collected	_____	Set Up	_____

Met Tower Anemometer _____ Wind Vane _____ Data Logger _____

Problems and general observations (please note on reverse side) **Operator:** _____

IADN Field Data Sheet

Station: _____ Operator: _____ Received: _____
Initial Date

Last Calibration Date: _____ Date Shipped: _____

HiVol	Sample ID	Filter ID	Start Date yy-mm-dd	End Date yy-mm-dd	Timer On	Timer Off	Operation Hours	Magnehelic Start	Magnehelic End
#					Flow:	Flow:			
					ENM:	ENM:			
#					Flow:	Flow:			
					ENM:	ENM:			
#					Flow:	Flow:			
					ENM:	ENM:			
#					Flow:	Flow:			
					ENM:	ENM:			

MIC	Sample ID	Start Date yy-mm-dd	End Date yy-mm-dd	Volume (L)
#				
#				

PFAS	Sample ID	Start Date yy-mm-dd	End Date yy-mm-dd	Volume (L)
# ADS-120				
# Passive				---

Sample ID	Remarks (i.e. Site Problems, Supply Requests, Correspondence, etc.)

Field / Site Log Sheet

Site Name: **Site Operator:**

Date	Arrival	Departure	MIC col installed	MIC col removed	XAD/QF installed	XAD/QF removed	shipped

Operator Rotation Checklist

IADN Site Operator Rotation Checklist

In an effort to maintain quality in the sampling procedures performed at IADN stations, the following checklist should be completed each time a new operator fills the position. Please go through and check the following items as being completed, and return to Indiana University at the time of the rotation.

Operator Initials

Read Field Sampling SOP* (hard copy provided) _____

Watch YouTube videos on Sample Set Up** _____

Do supply inventory with current operator _____

*Digital copy here: http://www.epa.gov/greatlakes/monitoring/air2/iadn/FieldSOP2005.pdf

**videos located at the following:

For Hi-Vol sampler: https://www.youtube.com/watch?v=w2SUer9zAFQ

For MIC sampler: https://www.youtube.com/watch?v=y56yTCIpJww

IADN Sampling Supplies Checklist

How Much On Site?

Aluminum Foil _____

Kimwipes _____

Orange Hi-Vol O-rings _____ # Thick one for bottom of Cartridge Tube

_____ # Size for top of Cartridge Tube

_____# Size for motor mount

Blank O-rings for MIC columns _____

Stainless Steel Forceps _____

Latex Gloves _____

DI Water, (Omnisolv) _____

Methanol, (Omnisolv) _____

Teflon Squeeze bottles _____

Electrical Tape _____

Teflon Tape _____

Packing Tape / Shipping materials _____

Field Data and Site Visit Sheets _____

If you find that any of these sampling supplies are low, please request more from Jim Bays at the following: 812-856-3951(office), 812-345-8842(cell, text), or email at **jcbays@indiana.edu**

5. PROTOCOL FOR OPERATION OF IADN SAMPLERS

PROTOCOL FOR OPERATION OF IADN SAMPLERS

SITE: Sleeping Bear Dunes DATE: 01/01/21

INSTRUMENTATION SCHEDULE

Precipitation (MIC)

Planned Sample ID	Sampler	Start	End	Hours	Type
SP-01-210201	1	Fri, Jan 01	Mon, Feb 01	744	S

Atmospheric (HiVol)

Planned Sample ID	Sampler	Start	End	Hours	Type
SH-01C/F-210111	1	Sun, Jan 10	Mon, Jan 11	24	S
SH-02C/F-210111	2	Sun, Jan 10	Mon, Jan 11	24	D
SH-01C/F-21019B	1	Tue, Jan 12	Tue, Jan 19	Field Blank	B
SH-01C/F-210123	1	Fri, Jan 22	Sat, Jan 23	24	S

Precipitation (ADS-120)

Planned Sample ID	Sampler	Start	End	Hours	Type
SB-210119	---	Fri, Jan 01	Tue, Jan 19	432	S
SB-210201	---	Tue, Jan 19	Mon, Feb 01	312	S

Passive (SIP Disk)

Planned Sample ID	Sampler	Start	End	Hours	Type
SS-210201	---	Fri, Jan 01	Mon, Feb 01	744	S

S = Standard Sample ; D = Duplicate ; B = Field Blank

SITE VISIT DATES

Fri, Jan 01	Tue, Jan 05	Tue, Jan 12	Tue, Jan 19	Tue, Jan 26	Mon, Feb 01

INSTRUCTIONS

Note: Site operators are expected to accurately follow field sampling protocols provided in the SOP. Items listed below are an outline intended for quick reference.

Precipitation (MIC)

Weekly (Tuesdays)

- Conduct inspection of equipment on a weekly basis to verify proper operation. Log inspection results.
- Check overflow container. Record the total volume using graduated cylinder. Log results.

XAD column removal and replacement -- 1st OF EVERY MONTH

- Repeat weekly assessment verifing equipment operation & final precipitation volume. Record information.
- Wipe MIC collection surface w/ fiber filter & rinse w/ DI water to allow deposits to pass through column.
- Remove column. Wrap in foil. Label. Place in plastic bag.
- Clean collector surface and funnel outlet thoroughly.
- Install new XAD column and add DI water to verify flow is established to the overflow container.
  If the 1st of the month is on a weekend, or weather is severe, XAD column change can be completed on Friday or Monday nearest the 1st.
- Ship collected sample(s) & forms promptly.

Atmospheric (HiVol)

Weekly (Tuesdays)

INSTALL SAMPLE(S) ON THE TUES BEFORE SAMPLING DATE AND REMOVE THEM THE FOLLOWING TUES
- Conduct inspection & testing of equipment to verify proper operation. Log results.
- Sample removal and labeling (filter/cartridge). Complete associated forms.
- Package removed samples for shipment.
- Install new filters & cartridges
- Set timer(s). Sampler(s) should start at 9:00 am local time on dates corresponding to the table above.
- Waste disposal and clean up.
- Ship collected sample(s) & forms promptly.

Precipitation (ADS-120)

Weekly (Tuesdays)
- Conduct inspection of equipment on a weekly basis to verify proper operation. Log inspection results.

Sample collection and replacement -- 2x per month
- Repeat weekly assessment verifing equipment operation & final precipitation volume. Record information.
- If collected volume <950 mL transfer entire sample into PP bottle
- If collected volume >950 mL, homogenize total sample, and transfer 950 mL into PP bottle
- Add 50 mL of methanol to bottle, seal with parafilm, wrap in foil, store in fridge
- Install new collection bucket
- Complete field forms
- Ship used carboy, graduated cylinder(s) and buckets for recleaning, along with completed field forms and sealed PP sample bottle

Passive (SIP disk)

Sample collection and deployment -- 1st of every month
- Conduct visual inspection of passive sample - if something seems out of the ordinary document it
- Collect the deployed sampler, rewrap and seal
- Unwrap and deploy new sampler
- Complete field forms
- Ship collected sample & field forms promptly

SAMPLE SHIPPING

Samples: MIC Columns, HiVol Cartridges, HiVol Filters, Passive samplers, PP Bottles
Forms: Site Visit Sheets, Field Data Sheets
Used PFAS supplies: Graduated cylinders, carboys, buckets

Send together to Bloomington, IN(Address below) on the Tuesday of sample removal

Jim Bays/Amina Salamova
Indiana University, MSB II
702 N Walnut Grove Ave. Room 343
Bloomington, IN 47405

Office: 812-856-4364/Jim's Cell: 812-345-8842
jcbays@indiana.edu/asalamov@indiana.edu

??? If you have any equipment questions please contact Jim Bays ???

6. SITE INFORMATION

The 3 IADN master sites in the U.S. are operated by Indiana University under contract to USEPA's Great Lakes National Program Office. Each site has an array of air and precipitation samplers that are mounted on 1m high cedar platforms and meteorological sensors mounted on a 10m tower. The Lake Superior, Lake Michigan, and Lake Erie sites are surrounded by a 6-foot galvanized fence. The sites also have 8 x 8 foot cedar equipment sheds. On-site operation is carried out by subcontractors, listed on the following pages, who visit the sites weekly on Tuesdays. Two IADN Satellite sites are situated on Lake Superior and Lake Michigan. For more information on these sites contact Jim Bays, Indiana University, 702 N Walnut Grove Ave., work:(812) 856-4364, jcbays@indiana.edu

Two IADN master sites are operated by AES/CARE in Canada. The Lake Ontario site is at Pt. Petre near Picton, Ontario at the northeast corner of the Lake, and the Lake Huron site is on Manitoulin Is. Near Gore Bay, Ontario in the northern part of the Lake.

Master Stations

1. <u>EAGLE HARBOR – LAKE SUPERIOR (E)</u>

Location: Latitude = 47°27'47" Longitude = 88°08'59"
Elevation: 185 m
Operation: 11-15-90 to date
Site Phone: 906-289-4910

The site is located at a Michigan DNR boat launching facility about 100 meters from Lake Superior, one kilometer east of the town Eagle Harbor, MI on the Keweenaw Peninsula. There are trees between the Lake and the site and a few boat storage buildings near the site on DNR property. The nearest residence is about 300m to the east. The site is served by an unpaved county road. The surrounding area is mostly wooded with a few summer cabins. It receives moderate use during the tourist season (June through August) and very light use during the rest of the year.

The only sources within 40km are private residence, small commercial establishments, and 2-lane state highways receiving light traffic. The nearest urban area is Houghton-Hancock about 50km to the southwest. Sources there include an airport, shopping activities, power plants, copper recycling, and some mining related industry as well as typical urban sources.

Site Operators: Ed Kisiel
9976 State Highway M-26
Mohawk, MI 49950

2. <u>STURGEON POINT – LAKE ERIE (T)</u>

Location: Latitude = 42°41'35" Longitude = 79°03'18"
Elevation: 176m
Operation: 11-15-91 to date
No site phone

This site is located at the Erie Co. Water Authority's Sturgeon Point intake plant near Evans Center, NY. It is about 25km southwest of Buffalo in an open field about 100m from the Lake. Access is by a paved plant road

used only by plant employees. The surrounding area contains a mix of residential, agricultural, commercial development with no sources other than the intake plant closer than 1km to the site.

Major sources within 40km include a large power plant about 20km southwest at Dunkirk, NY, the NY Throughway 10km to the south, and numerous steel and chemical industry sources about 20km to the northeast in Lakawanna, NY. In addition, the city of Buffalo, NY has many urban and industrial sources.

Site Operator: Chris Louth
Erie County Water Authority
722 Sturgeon Point Rd, Derby, NY 14047
(716) 685-8340

3. SLEEPING BEAR DUNES – LAKE MICHIGAN (S)

Location: Latitude = 44°45'40" Longitude = 86°03'31"
Elevation: 241m
Operation: 12-10-91 to date
Site phone: (231) 325-3031

The site is located about 5km south of Empire, MI and 1km west of Michigan Rt. 22, just south of Esch Rd. It is on property that is part of Sleeping Bear Dunes National Lakeshore operated by the National Park Service. The site is an open grassy field on a secondary dune about 100m above and 1km east of the Lake. The surrounding area contains wooded areas, agriculture (small fruits), and some summer cottages. It receives moderate use during the tourist season (May through October) and light use at other times. There are residences and farms about 0.5km from the site.

The closest urban area is Traverse City, MI about 50km to the east. Traverse City has very little industry but has the usual mix of urban sources.

Site Operator: Timothy F. Young
Email: Timothy9418@gmail.com

Satellite Stations

4. IIT-CHICAGO – LAKE MICHIGAN (C)

Location: Latitude = 41°50'04" Longitude = 87°37'29"
Elevation: 200m
Site Phone: (312) 808-6277
Operation: 2-1-93 to date

This site is located on top of a 4-story building on the IIT campus about 200m east of the 3300 block of S. State St. in Chicago, IL. It is about 1.5km west of Lake Michigan. The area is commercial and residential with a major expressway (Dan Ryan Expwy.) about 500 m west of the site. There is heavy urban and industrial development in all directions from the site; the heaviest concentration of industrial sources is 10 to 20km to the southeast in Chicago and northwest Indiana.

Site Operator: Liuyang Sun
CHEE Department, IIT

Perlstein Hall, Room 127
10 W 33rd Street
Chicago, IL 60616
Email:lsun33@hawk.iit.edu

Site Investigator: Dr. Nasrin Khalili
Illinois Institute of Technology
Dept. of Chemical and Env. Engineering
10W, 33rd St.
Chicago, IL 60617
Phone: (312) 567-3534
Fax: (312) 567-8874
Email: redmond@iit.edu; khalili@stuart.iit.edu

5. CLEVELAND (CRAIG SITE) - LAKE ERIE

Location: Latitude = 41°29'31.7"N Longitude = 81°40'42.7"W
Elevation: 791 ft
Operation: 12-20-02 to date
Site address: E.14th Street and Orange Avenue

Site Operator: Carlton See, Tim Bailey
Cleveland Department of Public Health
9127 Miles Ave.
Cleveland, OH 44105
E-mail: Csee@city.cleveland.oh.us

Contact Person: Bryan Sokolowsky, Dave DeChant
Cleveland Department of Public Health
Division of Environment
75 Erie View Plaza 1st Flr
Cleveland, OH 44105
Phone: (216) 664-2300

This site is run by City of Cleveland. It is known as Craig Site. It is at the intersection of Orange Avenue and Broadway. It is about 1.5 miles away from the Lake. It is within half a mile from the downtown area. Cleveland Brown Stadium and Jacob's field (Home of Cleveland Indians) are close to this site where lots of activities take place. This site is surrounded by industrial area.

QC Station

6. POINT PETRE – LAKE ONTARIO (P)

Location: Latitude = 43°50'20" Longitude = 77°9'10"
Site phone: 613-476-3883
Operation: 1-7-99 to date

This site is located 25mi southeast of Belleville, Ontario. The deck is located near the shoreline, in a cleared area of about 37m in diameter. Surrounding the clearing from the northwest to the southeast are low trees and shrubs of mixed varieties. The site itself is 150ft. from the Lake.

Site Operator: Mr. Darrel Smith
Env. Canada
Point Petre Master Station
324 Point Petre Road
Milford, ON KOK2PO
Phone: (613) 476-3883
Email: point.petre@bellnet.ca

7. ACCESS TO THE SITES

Eagle Harbor:

Travel on 26 toward Copper Harbor. There is a road on the left that follows around the harbor at the edge of town. Turn on this road and follow it around the harbor. The site is across from the old Coast Guard station..

Chicago:

On the Dan Ryan Expressway (90/94) take exit 35 and go east. Turn left on State Street, go about two blocks and turn right on 33rd Street. The site is on top of Farr Hall which is on the corner of 33rd and Michigan.

Sleeping Bear:

Travel South from Empire on 22, turn left on Esch Road. You will go up a dune. Look to the left for a service trail. The trail is for the site. If you start down the dune, you have missed it. The met tower is visible from Esch Road.

Sturgeon Point:

Travelling on 90 take the Evans/Angola exit and turn toward Evans/Angola. Turn right on route 5, look for a sign that says "Sturgeon Point Marina", turn left on that road and look for the entrance that is on the right. There is a gate at this entrance that has been closed since 9/11/2001. You will need to call on the intercom to have the gate opened. Tell them you are with the atmospheric sampling station. Follow the road around the left and drive toward the lake. If it is not wet, you can drive up to the site.

Cleveland:

Directions from the southwest are I71 to I90 to E 9th exit. Go south on East 9th to Broadway, Broadway to Orange. The site is visible from Broadway.

Figure 7: IADN Sampling Sites at Eagle Harbor and Chicago.

Figure 8: Hi -Volume Sampler Drawings (Different Parts)

Motor Mount

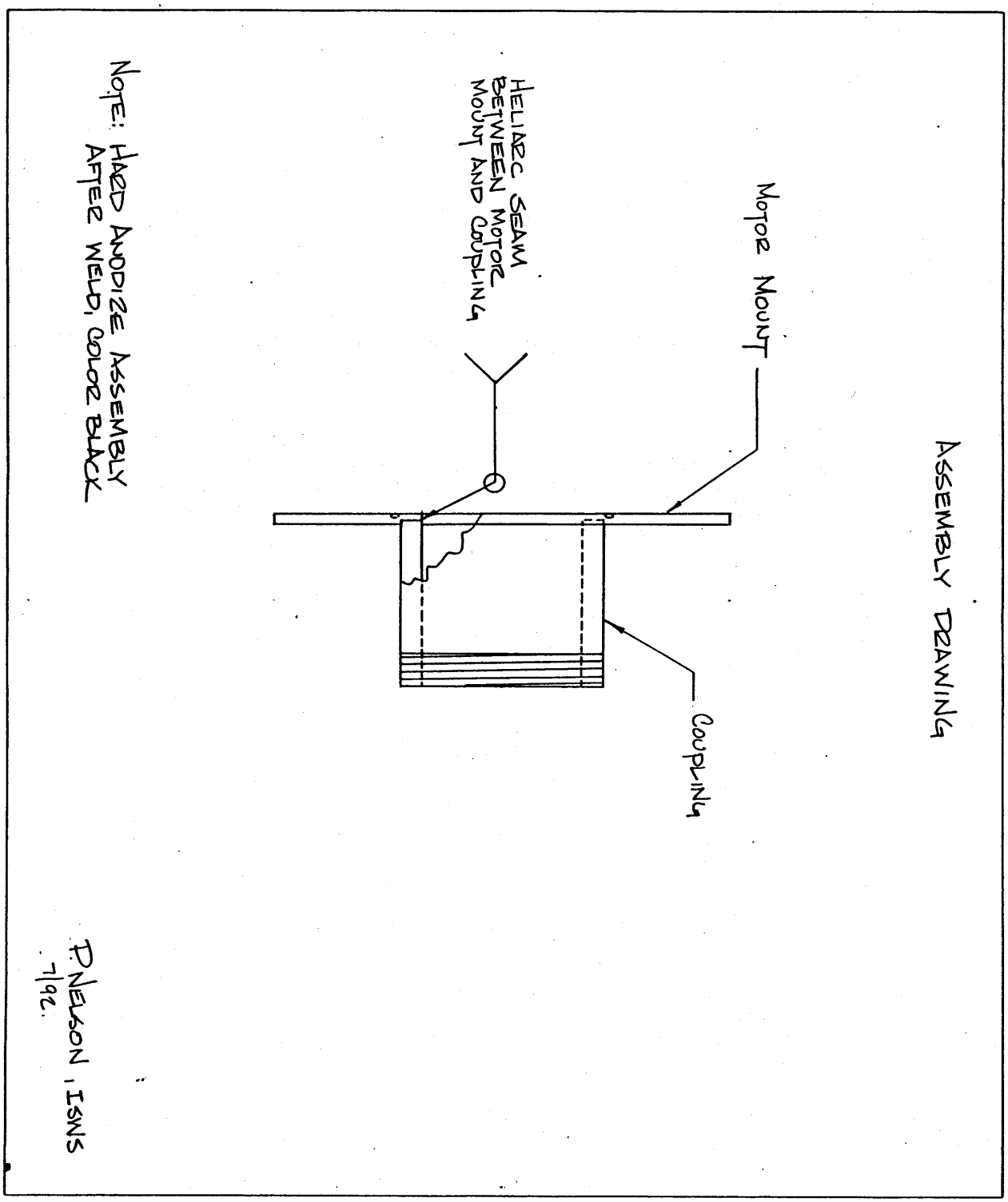

Motor Mount Looking down from above showing holes motor attachment and legs

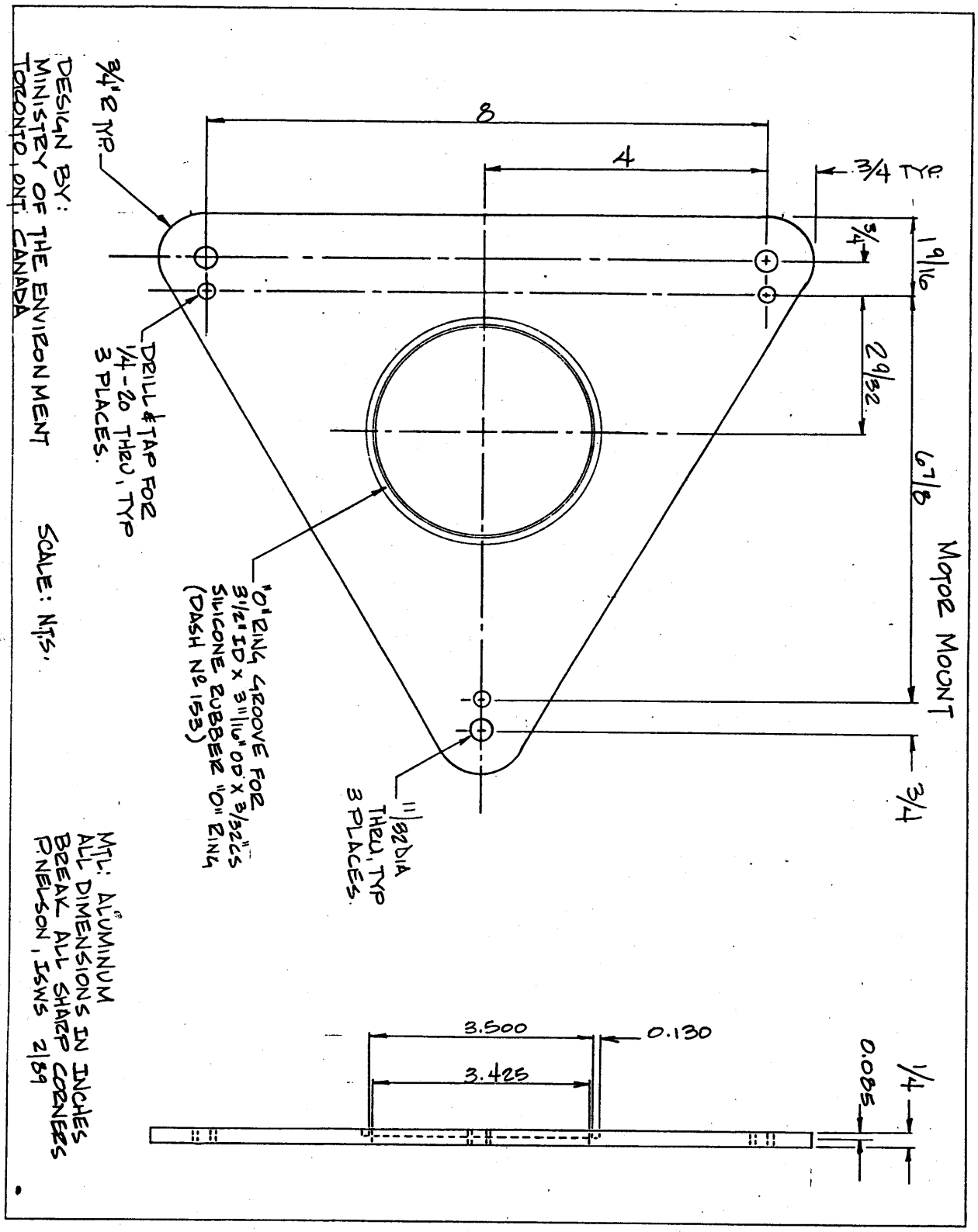

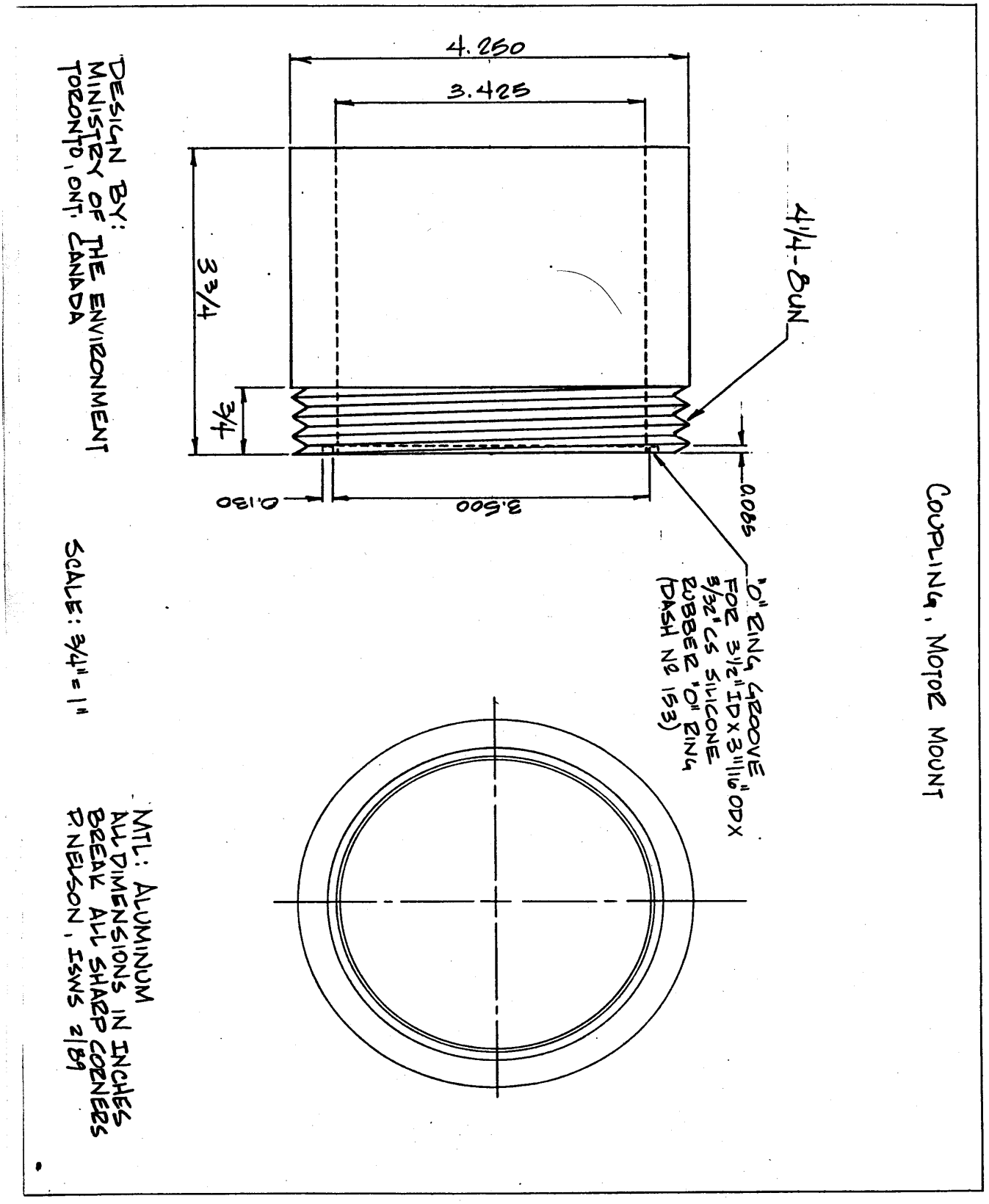
COUPLING, MOTOR MOUNT
4 1/4-8UN
4.250
3.425
3 3/4
3/4
0.085
3.500
0.130
"O" RING GROOVE
FOR 3 1/2" ID X 3 11/16" OD X
3/32" CS SILICONE
RUBBER "O" RING
(DASH No 153)
DESIGN BY:
MINISTRY OF THE ENVIRONMENT
TORONTO, ONT. CANADA
SCALE: 3/4" = 1"
MTL: ALUMINUM
ALL DIMENSIONS IN INCHES
BREAK ALL SHARP CORNERS
P. NELSON, ISWS 2/89

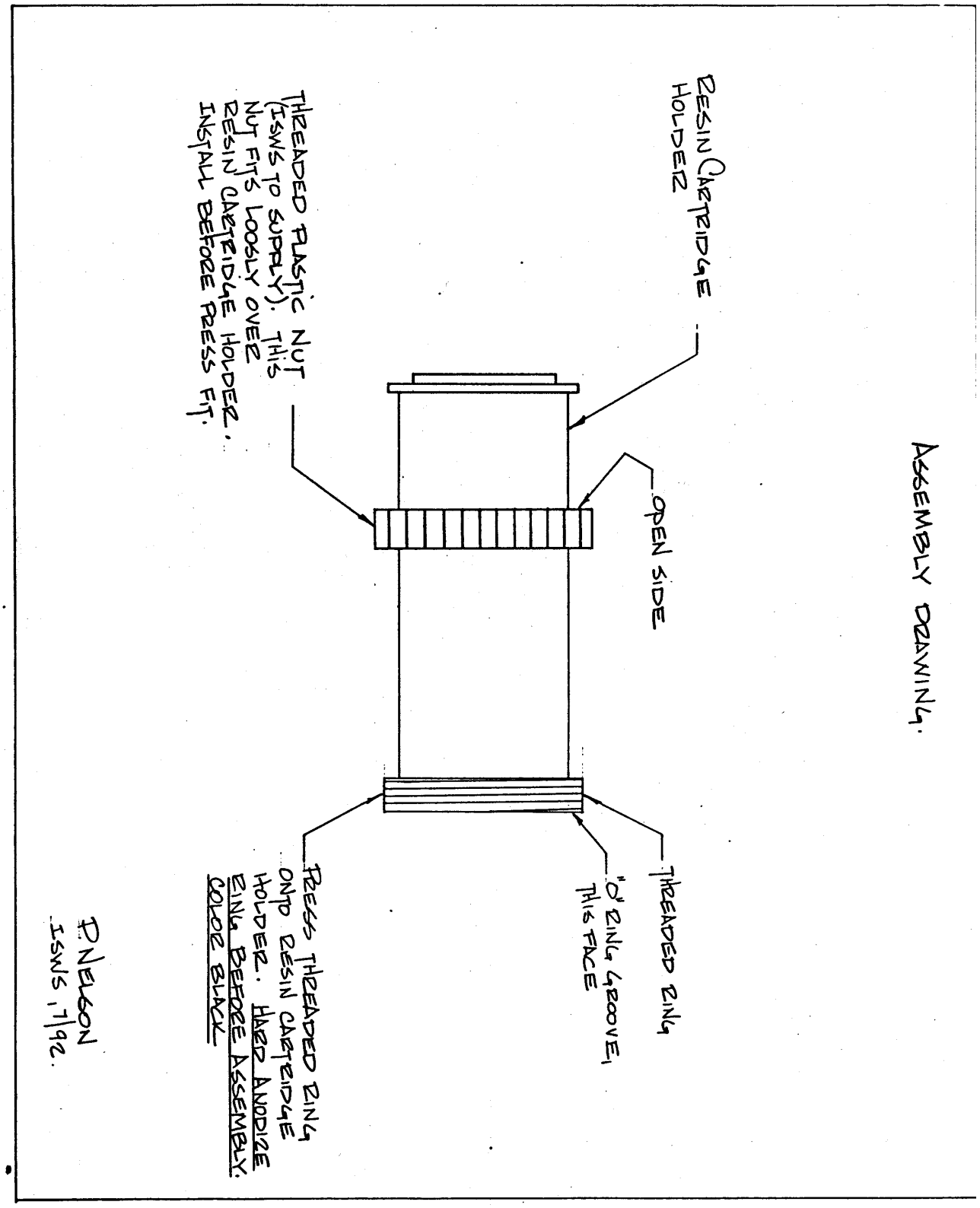
ASSEMBLY DRAWING.
RESIN CARTRIDGE HOLDER
OPEN SIDE
THREADED RING
"O" RING GROOVE, THIS FACE
THREADED PLASTIC NUT (ISWS TO SUPPLY). THIS NUT FITS LOOSLY OVER RESIN CARTRIDGE HOLDER. INSTALL BEFORE PRESS FIT.
PRESS THREADED RING ONTO RESIN CARTRIDGE HOLDER. HARD ANODIZE RING BEFORE ASSEMBLY. COLOR BLACK
P NELSON
ISWS, 7/92.

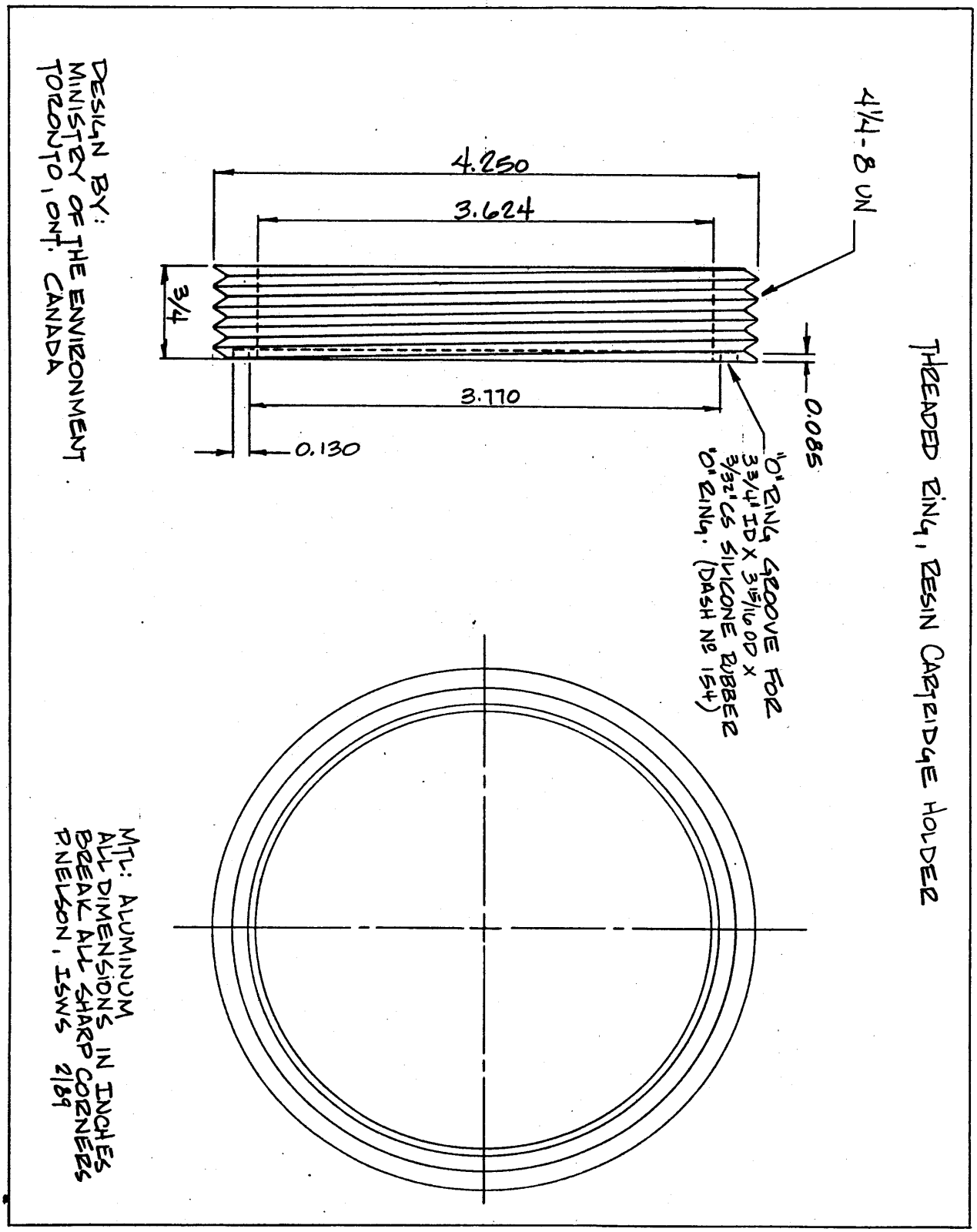
THREADED RING, RESIN CARTRIDGE HOLDER
4 1/4-8 UN
4.250
3.624
3/4
3.770
0.085
0.130
"O" RING GROOVE FOR
3 3/4" ID X 3 15/16 OD X
3/32" CS SILICONE RUBBER
"O" RING. (DASH Nº 154)
DESIGN BY:
MINISTRY OF THE ENVIRONMENT
TORONTO, ONT. CANADA
MTL: ALUMINUM
ALL DIMENSIONS IN INCHES
BREAK ALL SHARP CORNERS
P.NELSON, ISWS 2/89

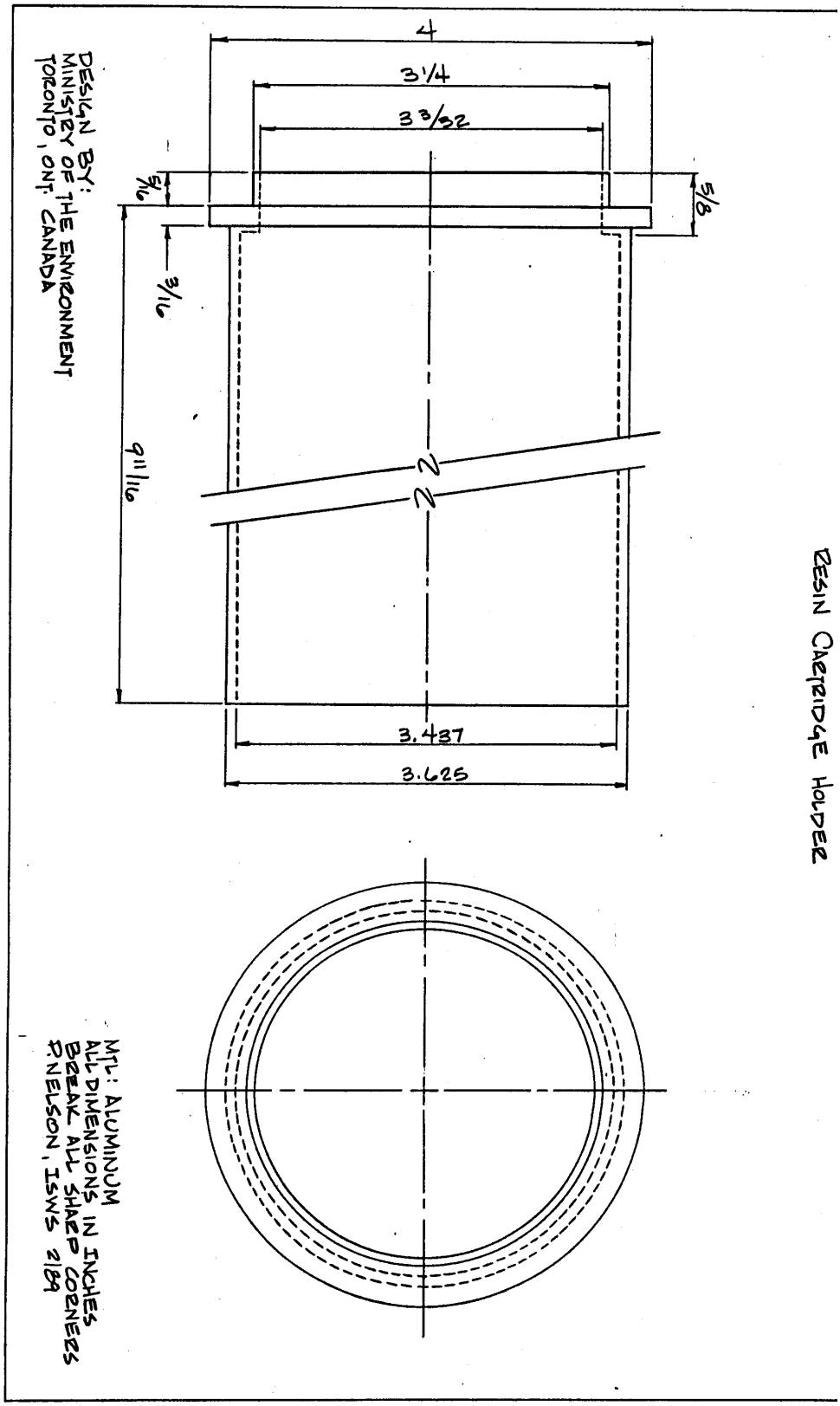
RESIN CARTRIDGE HOLDER
4
3 1/4
3 3/32
5/8
3/16
3/16
9 11/16
3.437
3.625
DESIGN BY:
MINISTRY OF THE ENVIRONMENT
TORONTO, ONT. CANADA
MTL: ALUMINUM
ALL DIMENSIONS IN INCHES
BREAK ALL SHARP CORNERS
P. NELSON, ISWS 2/89

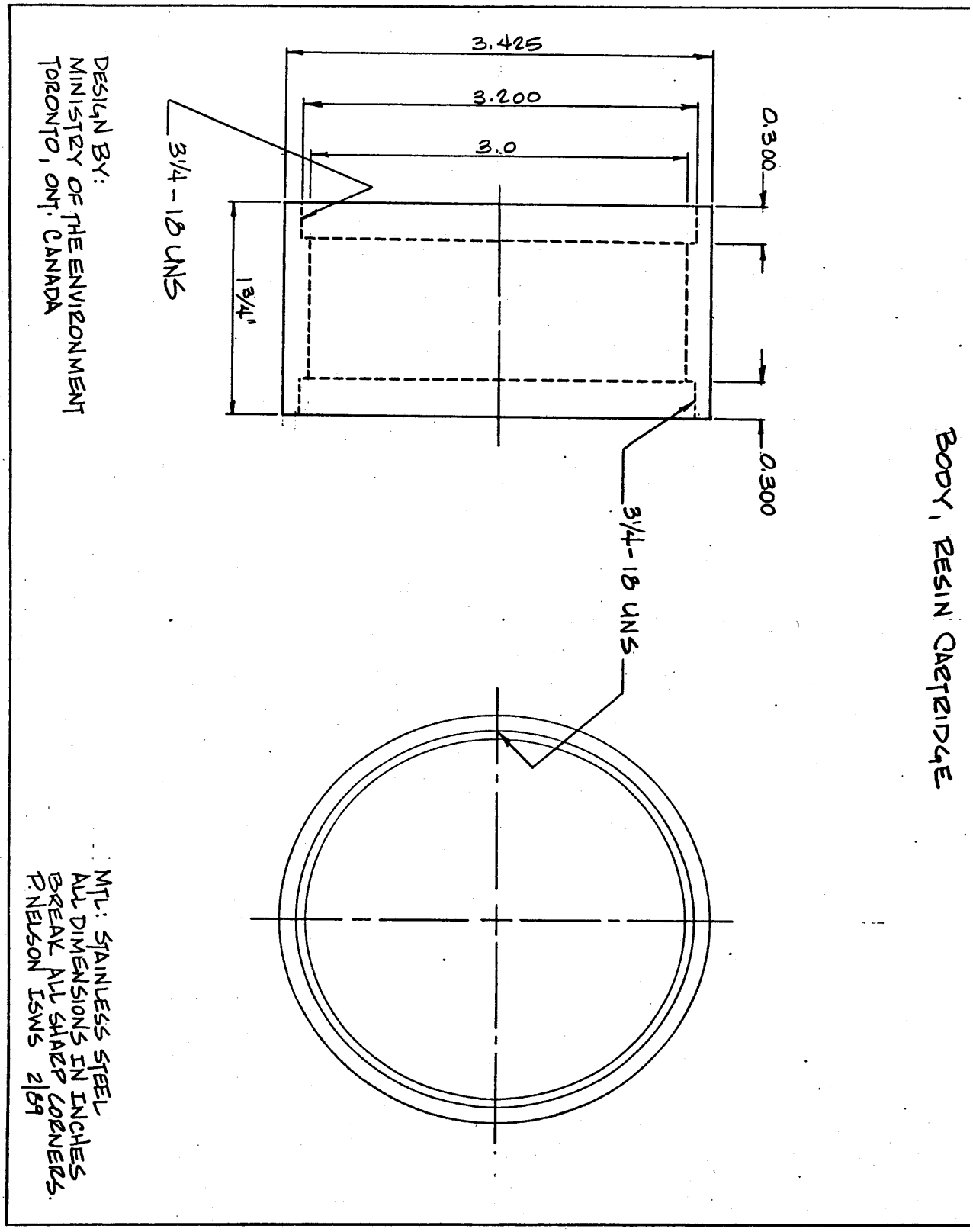
BODY, RESIN CARTRIDGE
3.425
3.200
3.0
0.300
0.300
1 3/4"
3/4-18 UNS
3/4-18 UNS
DESIGN BY:
MINISTRY OF THE ENVIRONMENT
TORONTO, ONT. CANADA
MTL: STAINLESS STEEL
ALL DIMENSIONS IN INCHES
BREAK ALL SHARP CORNERS.
P.NELSON ISWS 2/89

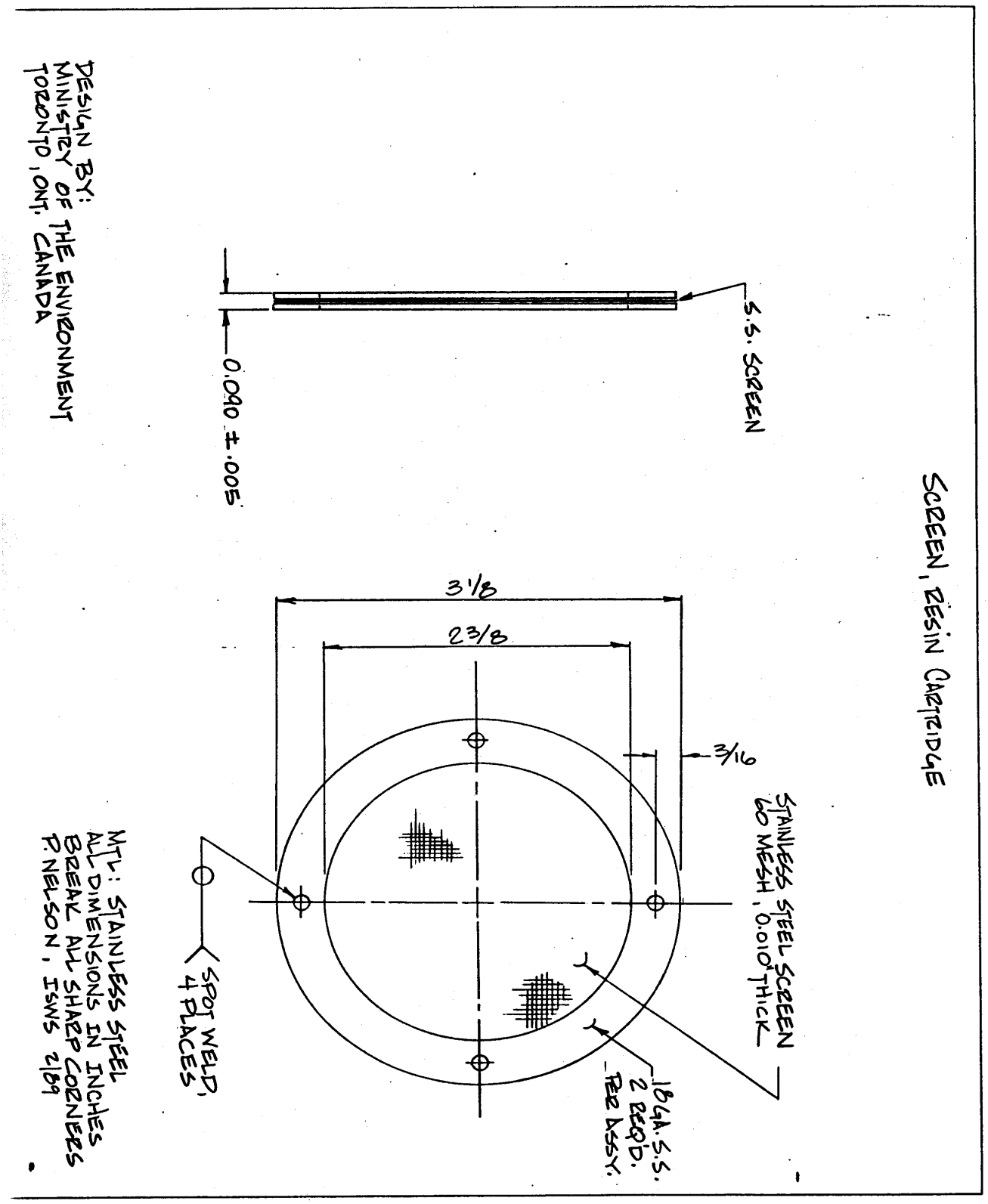
SCREEN, RESIN CARTRIDGE
S.S. SCREEN
0.090 ± .005
3 1/8
2 3/8
3/16
STAINLESS STEEL SCREEN
60 MESH, 0.010" THICK
18GA. S.S.
2 REQ'D.
PER ASSY.
SPOT WELD,
4 PLACES
DESIGN BY:
MINISTRY OF THE ENVIRONMENT
TORONTO, ONT. CANADA
MTL: STAINLESS STEEL
ALL DIMENSIONS IN INCHES
BREAK ALL SHARP CORNERS
P. NELSON, ISWS 2/89

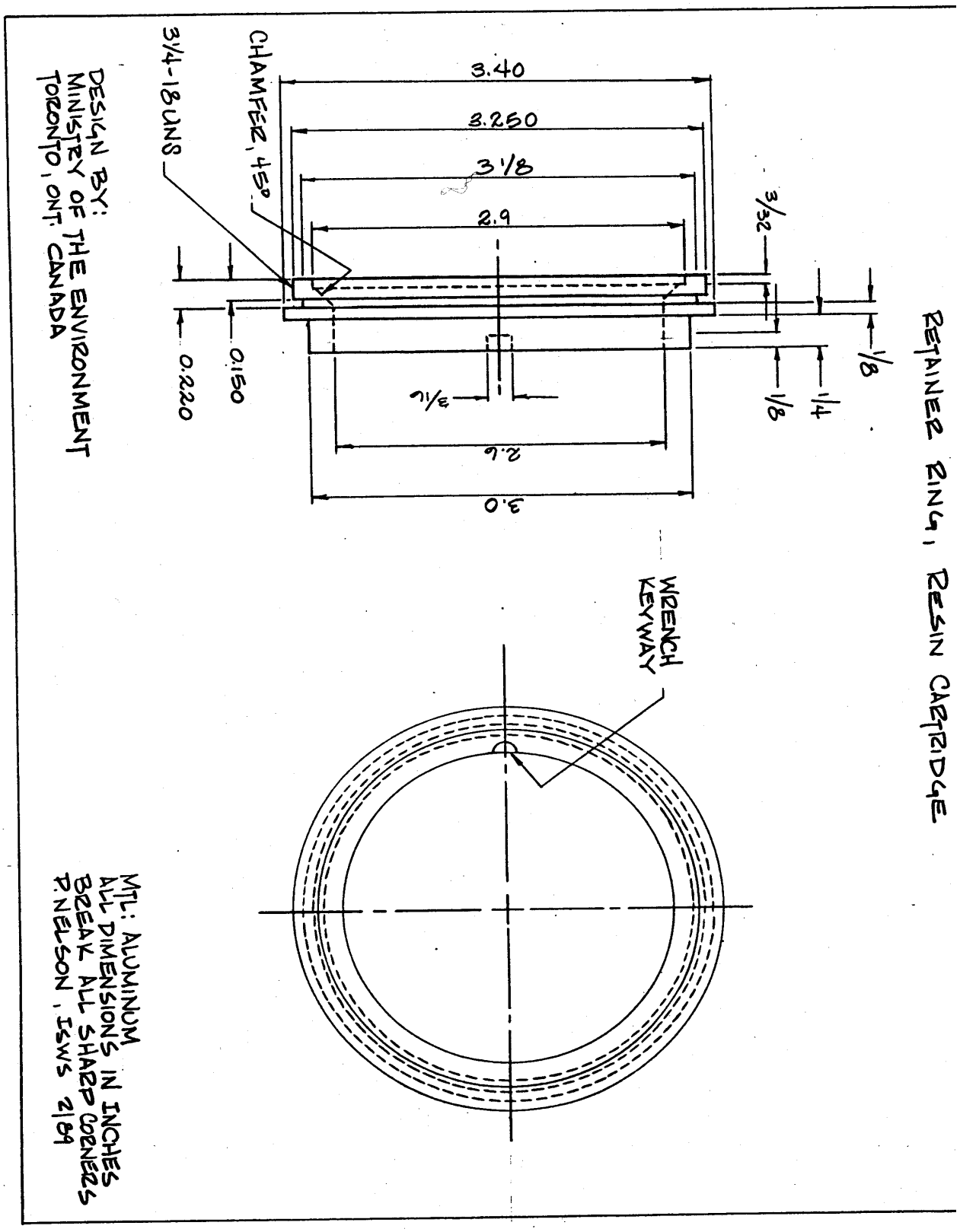
RETAINER RING, RESIN CARTRIDGE
3.40
3.250
3 1/8
2.9
CHAMFER, 45°
3/4-18 UNS
0.220
0.150
3/32
1/8
1/4
1/8
3/16
2.6
3.0
WRENCH KEYWAY
DESIGN BY:
MINISTRY OF THE ENVIRONMENT
TORONTO, ONT. CANADA
MTL: ALUMINUM
ALL DIMENSIONS IN INCHES
BREAK ALL SHARP CORNERS
P. NELSON, ISWS 2/89

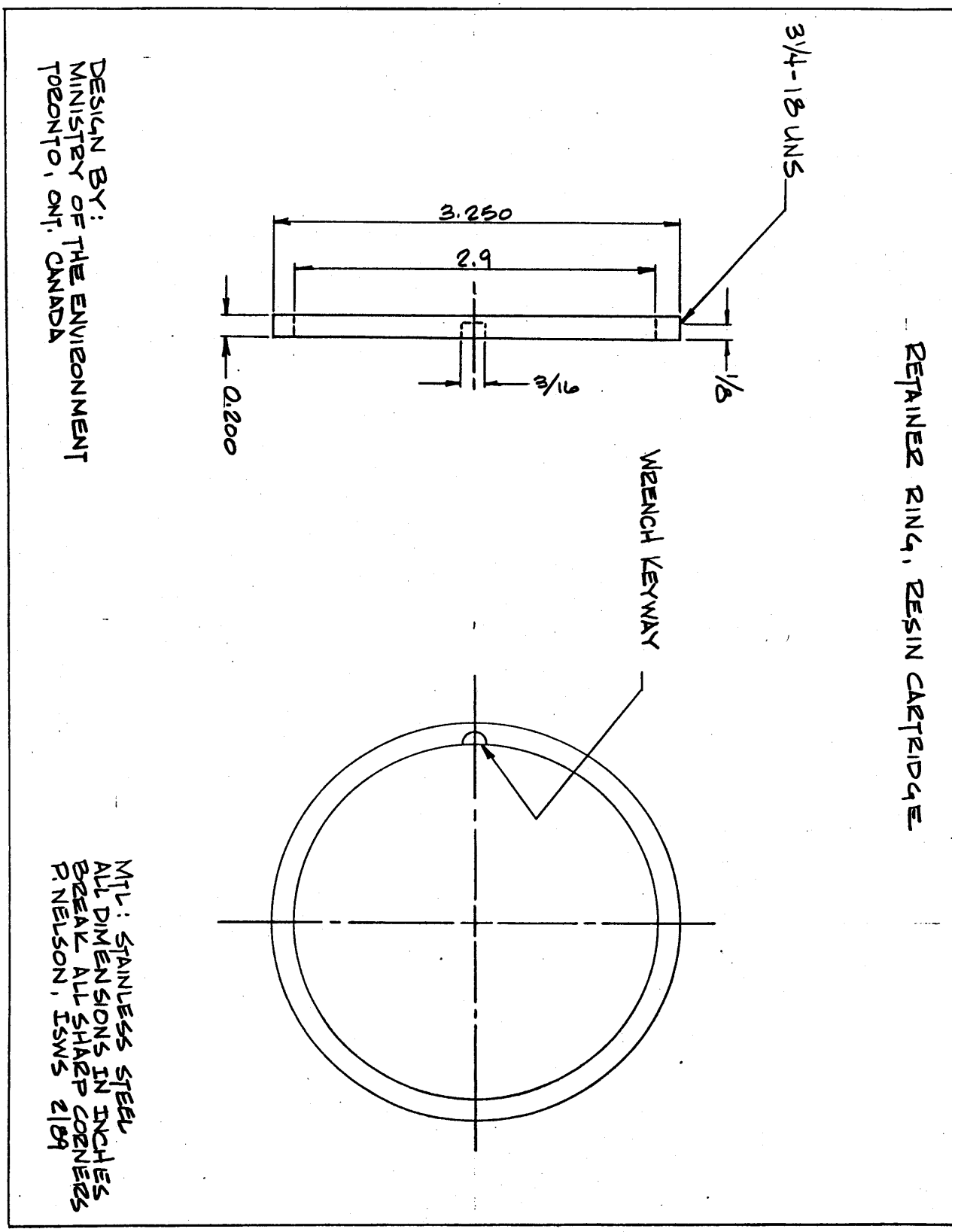
RETAINER RING, RESIN CARTRIDGE
3/4-18 UNS
3.250
2.9
1/8
3/16
0.200
WRENCH KEYWAY
DESIGN BY:
MINISTRY OF THE ENVIRONMENT
TORONTO, ONT. CANADA
MTL: STAINLESS STEEL
ALL DIMENSIONS IN INCHES
BREAK ALL SHARP CORNERS
P. NELSON, ISWS 2/89